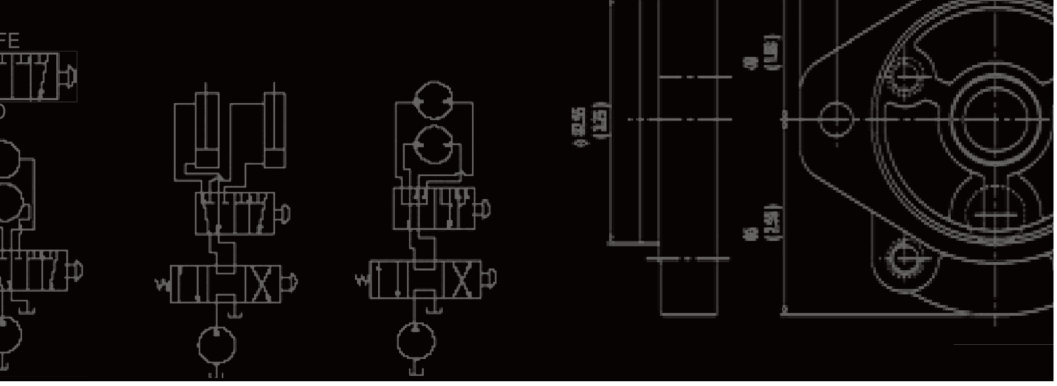

BAILEY HYDRAULICS™

CATALOGUE • 2025 • CATALOG

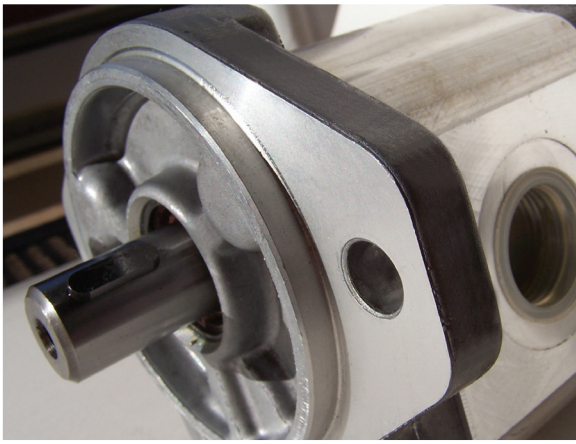

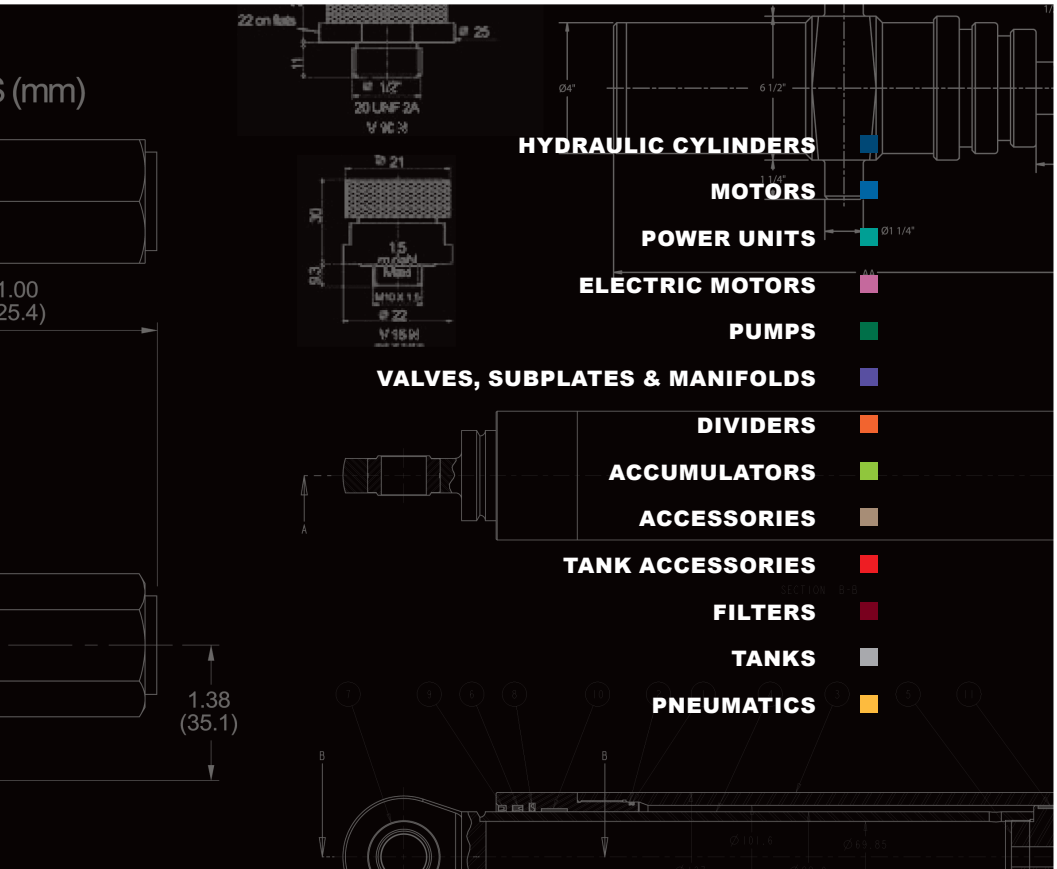

- HYDRAULIC CYLINDERS
- MOTORS
- POWER UNITS
- ELECTRIC MOTORS
- PUMPS
- VALVES, SUBPLATES & MANIFOLDS
- DIVIDERS
- ACCUMULATORS
- ACCESSORIES
- TANK ACCESSORIES
- FILTERS
- TANKS
- PNEUMATICS

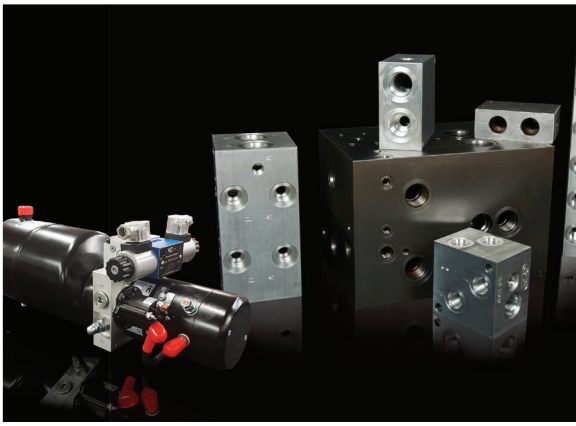

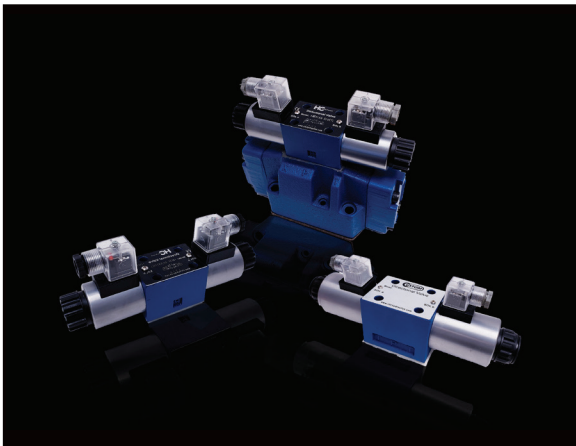

ABOUT BAILEY HYDRAULICS

Fluid power systems has been our passion since more than 25 years. Over these years, we have built a dedicated team of experts who thrive to continuously seek to improve our products and services in order to be your fluid power supplier of choice. This allowed us to be recognize has a strong hydraulic leader with a solid reputation in the North America fluid power industry.

SERVICE, SALES & EFFICIENCY

We are your hydraulics specialist. Our main objective is your complete satisfaction. Hydrolico offers reliable, proven and durable products in accordance with application and technical specifications. Our experienced sales team along with our professional, attentive customer service department will work in unison with our technical division to support your application needs.

Meeting and exceeding your demands are our priorities. Bailey Hydraulics thus offers you a wide range of warehoused products that can be modified and altered to your specifications, points of sales across Canada and the United States, facilities for production in Asia with on-site supervision by Hydrolico personnel and customized local production and prototypes available through our Canadian, US plant and affiliated partners.

We have surrounded our core products with several major brands of complementary products, providing a complete line to meet our customer's demand. Our product portfolio makes us your own solution supplier for all your hydraulic and pneumatic essentials.

HYDRO CUSTOM BRAND

Our proprietary brand, Hydro Custom, offers a wide range of hydraulic products. We design, develop and engineer all of our products with the highest standards of the industry. Our recognized expertise in hydraulic cylinders allows us to develop innovative solutions capable of meeting the most specific requirements. Thanks to our factories in Canada and Asia, we have developed a production capacity capable of responding to all your requests quickly and efficiently.

TABLE OF CONTENTS

HYDRO CUSTOM™

Thanks to our dedicated and experienced team, the Hydro Custom cylinder brand has carved out a place among the market leaders in hydraulics, and developed a stellar reputation in North America.

Conceived by Hydrolico, HC Hydro Custom provides a range of products designed in Canada to meet your needs and your specifications. These products are produced in our combined 200,000 ft² production facilities in Canada, USA and Asia. We use an integrated production process managed by the engineering team at our Canadian head office and carefully monitor quality assurance and quality control. Hydro Custom products come with a one-year limited warranty, and our after-sale service is unequaled in the industry.

Custom Cylinders offers you many benefits :

- Experienced adviser in development and design
- Innovative manufacturing solutions tailored to the needs of the clients
- Customized manufacturing solutions adapted to the speed, quantity and desired price
- All our cylinders are designed with the renown Hallite seals, with a few exceptions where other suppliers, such as Trelleborg, are better suited for the application
- A variety of specialized services that can be customized to your needs, including validation of 3D prototypes, repeated rigorous testing, installation and assembly in a contaminant-free environment
- A wide range of standard cylinders provided from our three warehouses located across North America, in addition to several points of service from trading partners
- A product with a quality/price ratio unmatched in our market

Because we design our own models and have our own production facilities, we can stand behind our products 100% from start to finish. We offer full hydraulic component repair and modification services across Canada.

We are proud to contribute to the success of many companies that produce mobile hydraulic equipment to various types of industries.

WELDED CYLINDERS - BUSHING TYPE

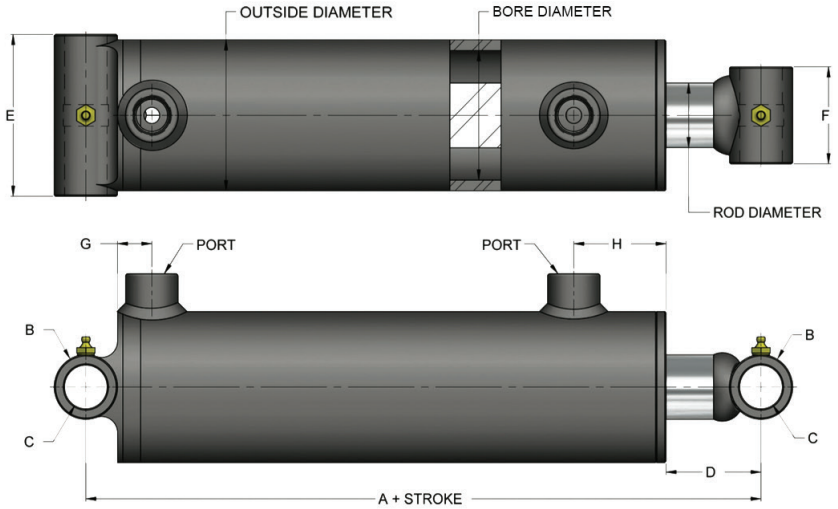

MODEL CODE	CYLINDER BORE	OUTSIDE DIAMETER	ROD DIAMETER	A	B	C	D	E	F	G	H	PORT SIZE*
BU15XX-S	1.50	1.875	1.00	8.00	1.25	0.76	2.62	2.25	2.00	1.06	1.87	SAE-04
BU20XX-S	2.00	2.375	1.25	8.00	1.50	1.01	2.25	2.75	2.25	1.00	2.06	SAE-06
BU25XX-S	2.50	2.875	1.50	8.00	1.50	1.01	2.25	3.25	2.25	0.81	2.18	SAE-08
BU30XX-S	3.00	3.50	1.50	8.00	1.50	1.01	2.25	3.75	2.25	0.81	2.18	SAE-08
BU35XX-S	3.50	4.00	1.75	10.00	2.00	1.26	4.00	4.25	2.25	0.81	2.18	SAE-08
BU40XX-S	4.00	4.50	2.00	10.00	2.25	1.51	3.75	4.75	2.50	0.81	2.18	SAE-08
BU50XX-S	5.00	5.50	2.50	12.00	3.00	1.76**	3.50	5.75	3.25	1.25	2.75	SAE-12

* NPT PORTS ARE ALSO AVAILABLE
** PIN SIZE WITH INSERT, 2" WHEN REMOVED
MAXIMUM RETRACTED WORKING PRESSURE : 3000 PSI
MAXIMUM EXTENDED WORKING PRESSURE : SEE TABLE
RETRACTED AND STROKE TOLERANCE ± 1/8"

MODEL CODE	BORE X STROKE	DIMENSIONS		ROD DIAMETER	PIN SIZE	PORT SIZE*	COLUMN LOADS (LBS)	PRESSURE (PSI)	WEIGHT (LBS)
		RETRACTED	EXTENDED						
BU1504-S	1.5” X 4”	12”	16”	1”	3/4”	SAE-04	5300	3000	8
BU1506-S	1.5” X 6”	14”	20”				5300	3000	9
BU1508-S	1.5” X 8”	16”	24”				5300	3000	10
BU1510-S	1.5” X 10”	18”	28”				5300	3000	12
BU1512-S	1.5” X 12”	20”	32”				5300	3000	13
BU1514-S	1.5” X 14”	22”	36”				5300	3000	14
BU1516-S	1.5” X 16”	24”	40”				5300	3000	15
BU1518-S	1.5” X 18”	26”	44”				4800	2700	17
BU1520-S	1.5” X 20”	28”	48”				4000	2300	18
BU1524-S	1.5” X 24”	32”	56”				3000	1700	20
BU2004-S	2” X 4”	12”	16”	1-1/4”	1”	SAE-06	9400	3000	12
BU2006-S	2” X 6”	14”	20”				9400	3000	13
BU2008-S	2” X 8”	16”	24”				9400	3000	15
BU2010-S	2” X 10”	18”	28”				9400	3000	17
BU2012-S	2” X 12”	20”	32”				9400	3000	19
BU2014-S	2” X 14”	22”	36”				9400	3000	20
BU2016-S	2” X 16”	24”	40”				9400	3000	22
BU2018-S	2” X 18”	26”	44”				9400	3000	24
BU2020-S	2” X 20”	28”	48”				9400	3000	25
BU2024-S	2” X 24”	32”	56”				7300	2300	29
BU2028-S	2” X 28”	36”	64”				5600	1700	32
BU2030-S	2” X 30”	38”	68”				4900	1500	34
BU2032-S	2” X 32”	40”	72”				4400	1400	35
BU2036-S	2” X 36”	44”	80”				3500	1100	39
BU2040-S	2” X 40”	48”	88”				2900	900	42
BU2048-S	2” X 48”	56”	104”				2100	600	49

COLUMN LOAD IS THE MAXIMUM PUSHING LOAD SUGGESTED USING A MINIMUM SAFETY FACTOR OF 2 AND BASED ON A PIN TO PIN MOUNTING CALCULATION.

WELDED CYLINDERS - BUSHING TYPE

MODEL CODE	BORE X STROKE	DIMENSIONS		ROD DIAMETER	PIN SIZE	PORT SIZE*	COLUMN LOADS (LBS)	PRESSURE (PSI)	WEIGHT (LBS)
		RETRACTED	EXTENDED						
BU2504-S	2.5” X 4”	12”	16”	1-1/2”	1”	SAE-08	14700	3000	16
BU2506-S	2.5” X 6”	14”	20”				14700	3000	18
BU2508-S	2.5” X 8”	16”	24”				14700	3000	20
BU2510-S	2.5” X 10”	18”	28”				14700	3000	22
BU2512-S	2.5” X 12”	20”	32”				14700	3000	24
BU2514-S	2.5” X 14”	22”	36”				14700	3000	27
BU2516-S	2.5” X 16”	24”	40”				14700	3000	29
BU2518-S	2.5” X 18”	26”	44”				14700	3000	31
BU2520-S	2.5” X 20”	28”	48”				14700	3000	33
BU2524-S	2.5” X 24”	32”	56”				14700	3000	38
BU2528-S	2.5” X 28”	36”	64”				11600	2300	42
BU2530-S	2.5” X 30”	38”	68”				10300	2100	45
BU2532-S	2.5” X 32”	40”	72”				9200	1800	47
BU2536-S	2.5” X 36”	44”	80”				7400	1500	51
BU2540-S	2.5” X 40”	48”	88”				6100	1200	56
BU2548-S	2.5” X 48”	56”	104”				4400	800	65
BU3004-S	3” X 4”	12”	16”	1-1/2”	1”	SAE-08	21200	3000	19
BU3006-S	3” X 6”	14”	20”				21200	3000	22
BU3008-S	3” X 8”	16”	24”				21200	3000	24
BU3010-S	3” X 10”	18”	28”				21200	3000	27
BU3012-S	3” X 12”	20”	32”				21200	3000	29
BU3014-S	3” X 14”	22”	36”				21200	3000	32
BU3016-S	3” X 16”	24”	40”				21200	3000	34
BU3018-S	3” X 18”	26”	44”				21200	3000	36
BU3020-S	3” X 20”	28”	48”				20700	2900	39
BU3024-S	3” X 24”	32”	56”				15200	2100	44
BU3028-S	3” X 28”	36”	64”				11600	1600	49
BU3030-S	3” X 30”	38”	68”				10300	1400	51
BU3032-S	3” X 32”	40”	72”				9200	1300	53
BU3036-S	3” X 36”	44”	80”				7400	1000	58
BU3040-S	3” X 40”	48”	88”				6100	800	63
BU3048-S	3” X 48”	56”	104”				4400	600	73
BU3504-S	3.5” X 4”	14”	18”	1-3/4”	1-1/4”	SAE-08	28800	3000	27
BU3506-S	3.5” X 6”	16”	22”				28800	3000	30
BU3508-S	3.5” X 8”	18”	26”				28800	3000	33
BU3510-S	3.5” X 10”	20”	30”				28800	3000	36
BU3512-S	3.5” X 12”	22”	34”				28800	3000	39
BU3514-S	3.5” X 14”	24”	38”				28800	3000	42
BU3516-S	3.5” X 16”	26”	42”				28800	3000	45
BU3518-S	3.5” X 18”	28”	46”				28800	3000	48
BU3520-S	3.5” X 20”	30”	50”				28800	3000	51
BU3524-S	3.5” X 24”	34”	58”				26200	2700	57
BU3528-S	3.5” X 28”	38”	66”				20200	2100	63
BU3530-S	3.5” X 30”	40”	70”				18000	1800	66
BU3532-S	3.5” X 32”	42”	74”				16100	1600	69
BU3536-S	3.5” X 36”	46”	82”				13100	1300	75
BU3540-S	3.5” X 40”	50”	90”				10900	1100	81
BU3548-S	3.5” X 48”	58”	106”				7800	800	94

COLUMN LOAD IS THE MAXIMUM PUSHING LOAD SUGGESTED USING A MINIMUM SAFETY FACTOR OF 2 AND BASED ON A PIN TO PIN MOUNTING CALCULATION.

WELDED CYLINDERS - BUSHING TYPE

MODEL CODE	BORE X STROKE	DIMENSIONS		ROD DIAMETER	PIN SIZE	PORT SIZE*	COLUMN LOADS (LBS)	PRESSURE (PSI)	WEIGHT (LBS)
		RETRACTED	EXTENDED						
BU4004-S	4” X 4”	14”	18”	2”	1-1/2”	SAE-08	37600	3000	34
BU4006-S	4” X 6”	16”	22”				37600	3000	38
BU4008-S	4” X 8”	18”	26”				37600	3000	41
BU4010-S	4” X 10”	20”	30”				37600	3000	45
BU4012-S	4” X 12”	22”	34”				37600	3000	49
BU4014-S	4” X 14”	24”	38”				37600	3000	52
BU4016-S	4” X 16”	26”	42”				37600	3000	56
BU4018-S	4” X 18”	28”	46”				37600	3000	59
BU4020-S	4” X 20”	30”	50”				37600	3000	63
BU4024-S	4” X 24”	34”	58”				37600	3000	70
BU4028-S	4” X 28”	38”	66”				34600	2700	78
BU4030-S	4” X 30”	40”	70”				30700	2400	81
BU4032-S	4” X 32”	42”	74”				27500	2100	85
BU4036-S	4” X 36”	46”	82”				22400	1700	92
BU4040-S	4” X 40”	50”	90”				18600	1400	99
BU4048-S	4” X 48”	58”	106”				13400	1000	114
BU5004-S	5” X 4”	16”	20”	2-1/2”	1-3/4”	SAE-12	58900	3000	64
BU5006-S	5” X 6”	18”	24”				58900	3000	69
BU5008-S	5” X 8”	20”	28”				58900	3000	75
BU5010-S	5” X 10”	22”	32”				58900	3000	80
BU5012-S	5” X 12”	24”	36”				58900	3000	85
BU5014-S	5” X 14”	26”	40”				58900	3000	90
BU5016-S	5” X 16”	28”	44”				58900	3000	96
BU5018-S	5” X 18”	30”	48”				58900	3000	101
BU5020-S	5” X 20”	32”	52”				58900	3000	106
BU5024-S	5” X 24”	36”	60”				58900	3000	116
BU5028-S	5” X 28”	40”	68”				58900	3000	126
BU5030-S	5” X 30”	42”	72”				58900	3000	131
BU5032-S	5” X 32”	44”	76”				58900	3000	136
BU5036-S	5” X 36”	48”	84”				52100	2600	147
BU5040-S	5” X 40”	52”	92”				43400	2200	157
BU5048-S	5” X 48”	60”	108”				31500	1600	177

COLUMN LOAD IS THE MAXIMUM PUSHING LOAD SUGGESTED USING A MINIMUM SAFETY FACTOR OF 2 AND BASED ON A PIN TO PIN MOUNTING CALCULATION.

WELDED CYLINDERS - CLEVIS TYPE

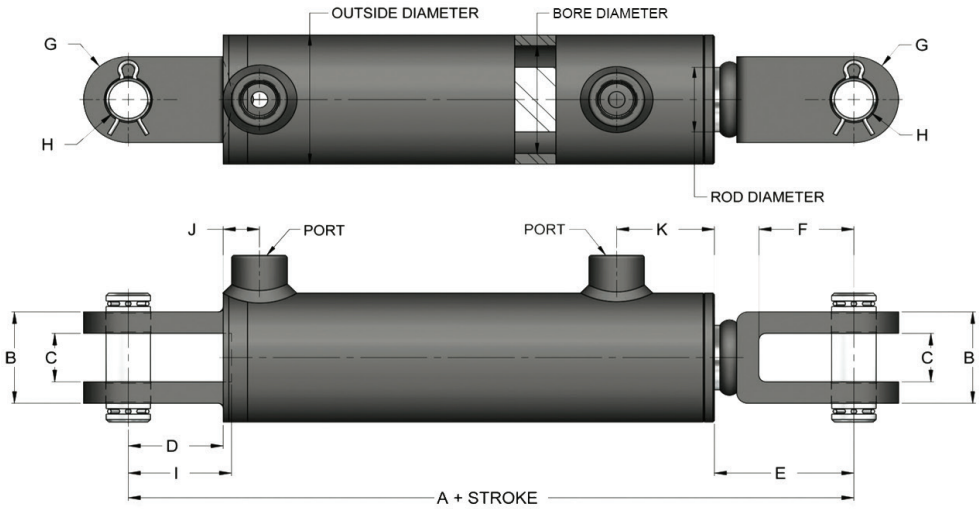

MODEL CODE	CYLINDER BORE	OUTSIDE DIAMETER	ROD DIAMETER	*A	B	C	D	*E	F	G	H	I	J	K	PORT SIZE*
CL15XX-S	1.50	1.875	1.00	8.25	1.62	0.87	1.37	2.25	1.37	1.50	0.76	-	0.93	1.87	SAE-04
CL20XX-S	2.00	2.375	1.25	10.25	2.12	1.12	2.12	3.12	2.12	2.00	1.01	-	1.00	2.06	SAE-06
CL25XX-S	2.50	2.875	1.50	10.25	2.12	1.12	2.12	3.12	2.12	2.00	1.01	-	0.81	2.18	SAE-08
CL30XX-S	3.00	3.50	1.50	10.25	2.12	1.12	2.12	3.12	2.12	2.00	1.01	-	0.81	2.18	SAE-08
CL35XX-S	3.50	4.00	1.75	10.25	2.37	1.12	2.00	3.12	2.12	2.00	1.01	2.12	0.93	2.18	SAE-08
CL40XX-S	4.00	4.50	2.00	10.25	2.37	1.12	1.75	3.12	2.00	2.00	1.01	2.00	1.06	2.18	SAE-08
CL50XX-S	5.00	5.50	2.50	13.00	3.12	1.62	2.25	3.62	2.25	3.00	1.51	-	1.37	2.75	SAE-12

FOR 2" TO 4" BORE, 8" STROKE : A = 12.25", E = 5.12"
* NPT PORTS ARE ALSO AVAILABLE FROM 1.5" TO 4" BORE CYLINDERS
MAXIMUM RETRACTED WORKING PRESSURE : 3000 PSI
MAXIMUM EXTENDED WORKING PRESSURE : SEE TABLE
RETRACTED AND STROKE TOLERANCE ± 1/8"

MODEL CODE	BORE X STROKE	DIMENSIONS		ROD DIAMETER	PIN SIZE	PORT SIZE*	COLUMN LOADS (LBS)	PRESSURE (PSI)	WEIGHT (LBS)
		RETRACTED	EXTENDED						
CL1504-S	1.5” X 4”	12-1/4”	16-1/4”	1”	3/4”	SAE-04	5300	3000	8
CL1506-S	1.5” X 6”	14-1/4”	20-1/4”				5300	3000	9
CL1508-S	1.5” X 8”	16-1/4”	24-1/4”				5300	3000	11
CL1510-S	1.5” X 10”	18-1/4”	28-1/4”				5300	3000	12
CL1512-S	1.5” X 12”	20-1/4”	32-1/4”				5300	3000	13
CL1514-S	1.5” X 14”	22-1/4”	36-1/4”				5300	3000	14
CL1516-S	1.5” X 16”	24-1/4”	40-1/4”				5300	3000	15
CL1518-S	1.5” X 18”	26-1/4”	44-1/4”				4800	2700	17
CL1520-S	1.5” X 20”	28-1/4”	48-1/4”				4000	2200	18
CL1524-S	1.5” X 24”	32-1/4”	56-1/4”				2900	1600	20
CL2004-S	2” X 4”	14-1/4”	18-1/4”	1-1/4”	1”	SAE-06	9400	3000	14
CL2006-S	2” X 6”	16-1/4”	22-1/4”				9400	3000	16
CL2008-S	2” X 8”	20-1/4”	28-1/4”				9400	3000	18
CL2010-S	2” X 10”	20-1/4”	30-1/4”				9400	3000	19
CL2012-S	2” X 12”	22-1/4”	34-1/4”				9400	3000	21
CL2014-S	2” X 14”	24-1/4”	38-1/4”				9400	3000	23
CL2016-S	2” X 16”	26-1/4”	42-1/4”				9400	3000	25
CL2018-S	2” X 18”	28-1/4”	46-1/4”				9400	3000	26
CL2020-S	2” X 20”	30-1/4”	50-1/4”				9100	2900	28
CL2024-S	2” X 24”	34-1/4”	58-1/4”				6700	2100	31
CL2028-S	2” X 28”	38-1/4”	66-1/4”				5200	1600	35
CL2030-S	2” X 30”	40-1/4”	70-1/4”				4600	1400	36
CL2032-S	2” X 32”	42-1/4”	74-1/4”				4100	1300	38
CL2034-S	2” X 34”	44-1/4”	78-1/4”				3700	1100	40
CL2036-S	2” X 36”	46-1/4”	82-1/4”				3400	1000	42
CL2040-S	2” X 40”	50-1/4”	90-1/4”				2800	800	45
CL2048-S	2” X 48”	58-1/4”	106-1/4”				2000	600	52

COLUMN LOAD IS THE MAXIMUM PUSHING LOAD SUGGESTED USING A MINIMUM SAFETY FACTOR OF 2 AND BASED ON A PIN TO PIN MOUNTING CALCULATION.

WELDED CYLINDERS - CLEVIS TYPE

MODEL CODE	BORE X STROKE	DIMENSIONS		ROD DIAMETER	PIN SIZE	PORT SIZE*	COLUMN LOADS (LBS)	PRESSURE (PSI)	WEIGHT (LBS)
		RETRACTED	EXTENDED						
CL2504-S	2.5” X 4”	14-1/4”	18-1/4”				14700	3000	18
CL2506-S	2.5” X 6”	16-1/4”	22-1/4”				14700	3000	20
CL2508-S	2.5” X 8”	20-1/4”	28-1/4”				14700	3000	24
CL2510-S	2.5” X 10”	20-1/4”	30-1/4”				14700	3000	25
CL2512-S	2.5” X 12”	22-1/4”	34-1/4”				14700	3000	27
CL2514-S	2.5” X 14”	24-1/4”	38-1/4”				14700	3000	29
CL2516-S	2.5” X 16”	26-1/4”	42-1/4”				14700	3000	32
CL2518-S	2.5” X 18”	28-1/4”	46-1/4”				14700	3000	34
CL2520-S	2.5” X 20”	30-1/4”	50-1/4”	1-1/2”	1”	SAE-08	14700	3000	36
CL2524-S	2.5” X 24”	34-1/4”	58-1/4”				14000	2800	40
CL2528-S	2.5” X 28”	38-1/4”	66-1/4”				10800	2200	45
CL2530-S	2.5” X 30”	40-1/4”	70-1/4”				9600	1900	47
CL2532-S	2.5” X 32”	42-1/4”	74-1/4”				8600	1700	49
CL2534-S	2.5” X 34”	44-1/4”	78-1/4”				7700	1500	52
CL2536-S	2.5” X 36”	46-1/4”	82-1/4”				7000	1400	54
CL2540-S	2.5” X 40”	50-1/4”	90-1/4”				5800	1100	58
CL2548-S	2.5” X 48”	58-1/4”	106-1/4”				4200	800	67
CL3004-S	3” X 4”	14-1/4”	18-1/4”				21200	3000	22
CL3006-S	3” X 6”	16-1/4”	22-1/4”				21200	3000	24
CL3008-S	3” X 8”	20-1/4”	28-1/4”				21200	3000	27
CL3010-S	3” X 10”	20-1/4”	30-1/4”				21200	3000	29
CL3012-S	3” X 12”	22-1/4”	34-1/4”				21200	3000	31
CL3014-S	3” X 14”	24-1/4”	38-1/4”				21200	3000	34
CL3016-S	3” X 16”	26-1/4”	42-1/4”				21200	3000	36
CL3018-S	3” X 18”	28-1/4”	46-1/4”	1-1/2”	1”	SAE-08	21200	3000	39
CL3020-S	3” X 20”	30-1/4”	50-1/4”				18800	2600	41
CL3024-S	3” X 24”	34-1/4”	58-1/4”				14000	1900	46
CL3028-S	3” X 28”	38-1/4”	66-1/4”				10800	1500	51
CL3030-S	3” X 30”	40-1/4”	70-1/4”				9600	1300	53
CL3032-S	3” X 32”	42-1/4”	74-1/4”				8600	1200	56
CL3034-S	3” X 34”	44-1/4”	78-1/4”				7700	1100	58
CL3036-S	3” X 36”	46-1/4”	82-1/4”				7000	900	61
CL3504-S	3.5” X 4”	14-1/4”	18-1/4”				28800	3000	27
CL3506-S	3.5” X 6”	16-1/4”	22-1/4”				28800	3000	30
CL3508-S	3.5” X 8”	20-1/4”	28-1/4”				28800	3000	35
CL3510-S	3.5” X 10”	20-1/4”	30-1/4”				28800	3000	36
CL3512-S	3.5” X 12”	22-1/4”	34-1/4”				28800	3000	39
CL3514-S	3.5” X 14”	24-1/4”	38-1/4”				28800	3000	42
CL3516-S	3.5” X 16”	26-1/4”	42-1/4”				28800	3000	46
CL3518-S	3.5” X 18”	28-1/4”	46-1/4”	1-3/4”	1”	SAE-08	28800	3000	49
CL3520-S	3.5” X 20”	30-1/4”	50-1/4”				28800	3000	52
CL3524-S	3.5” X 24”	34-1/4”	58-1/4”				26000	2700	58
CL3528-S	3.5” X 28”	38-1/4”	66-1/4”				20100	2000	64
CL3530-S	3.5” X 30”	40-1/4”	70-1/4”				17900	1800	67
CL3532-S	3.5” X 32”	42-1/4”	74-1/4”				16000	1600	70
CL3534-S	3.5” X 34”	44-1/4”	78-1/4”				14400	1500	73
CL3536-S	3.5” X 36”	46-1/4”	82-1/4”				13000	1300	76

COLUMN LOAD IS THE MAXIMUM PUSHING LOAD SUGGESTED USING A MINIMUM SAFETY FACTOR OF 2 AND BASED ON A PIN TO PIN MOUNTING CALCULATION.

WELDED CYLINDERS - CLEVIS TYPE

MODEL CODE	BORE X STROKE	DIMENSIONS		ROD DIAMETER	PIN SIZE	PORT SIZE*	COLUMN LOADS (LBS)	PRESSURE (PSI)	WEIGHT (LBS)
		RETRACTED	EXTENDED						
CL4004-S	4” X 4”	14-1/4”	18-1/4”	2”	1”	SAE-08	37600	3000	33
CL4006-S	4” X 6”	16-1/4”	22-1/4”				37600	3000	37
CL4008-S	4” X 8”	20-1/4”	28-1/4”				37600	3000	42
CL4010-S	4” X 10”	20-1/4”	30-1/4”				37600	3000	44
CL4012-S	4” X 12”	22-1/4”	34-1/4”				37600	3000	48
CL4014-S	4” X 14”	24-1/4”	38-1/4”				37600	3000	52
CL4016-S	4” X 16”	26-1/4”	42-1/4”				37600	3000	55
CL4018-S	4” X 18”	28-1/4”	46-1/4”				37600	3000	59
CL4020-S	4” X 20”	30-1/4”	50-1/4”				37600	3000	63
CL4024-S	4” X 24”	34-1/4”	58-1/4”				37600	3000	70
CL4028-S	4” X 28”	38-1/4”	66-1/4”				34300	2700	77
CL4030-S	4” X 30”	40-1/4”	70-1/4”				30500	2400	81
CL4032-S	4” X 32”	42-1/4”	74-1/4”				27300	2100	85
CL4034-S	4” X 34”	44-1/4”	78-1/4”				24600	1900	89
CL4036-S	4” X 36”	46-1/4”	82-1/4”				22200	1700	92
CL5004-S	5” X 4”	17”	21”	2-1/2”	1-1/2”	SAE-12	58900	3000	64
CL5006-S	5” X 6”	19”	25”				58900	3000	69
CL5008-S	5” X 8”	21”	29”				58900	3000	74
CL5010-S	5” X 10”	23”	33”				58900	3000	79
CL5012-S	5” X 12”	25”	37”				58900	3000	84
CL5014-S	5” X 14”	27”	41”				58900	3000	89
CL5016-S	5” X 16”	29”	45”				58900	3000	95
CL5018-S	5” X 18”	31”	49”				58900	3000	100
CL5020-S	5” X 20”	33”	53”				58900	3000	105
CL5024-S	5” X 24”	37”	61”				58900	3000	115
CL5028-S	5” X 28”	41”	69”				58900	3000	125
CL5030-S	5” X 30”	43”	73”				58900	3000	130
CL5032-S	5” X 32”	45”	77”				58900	3000	135
CL5034-S	5” X 34”	47”	81”				56100	2800	141
CL5036-S	5” X 36”	49”	85”				50900	2500	146
CL5040-S	5” X 40”	53”	93”				42500	2100	156
CL5048-S	5” X 48”	61”	109”				30900	1500	176

COLUMN LOAD IS THE MAXIMUM PUSHING LOAD SUGGESTED USING A MINIMUM SAFETY FACTOR OF 2 AND BASED ON A PIN TO PIN MOUNTING CALCULATION.

WELDED CYLINDERS - BUSHING & CLEVIS TYPE

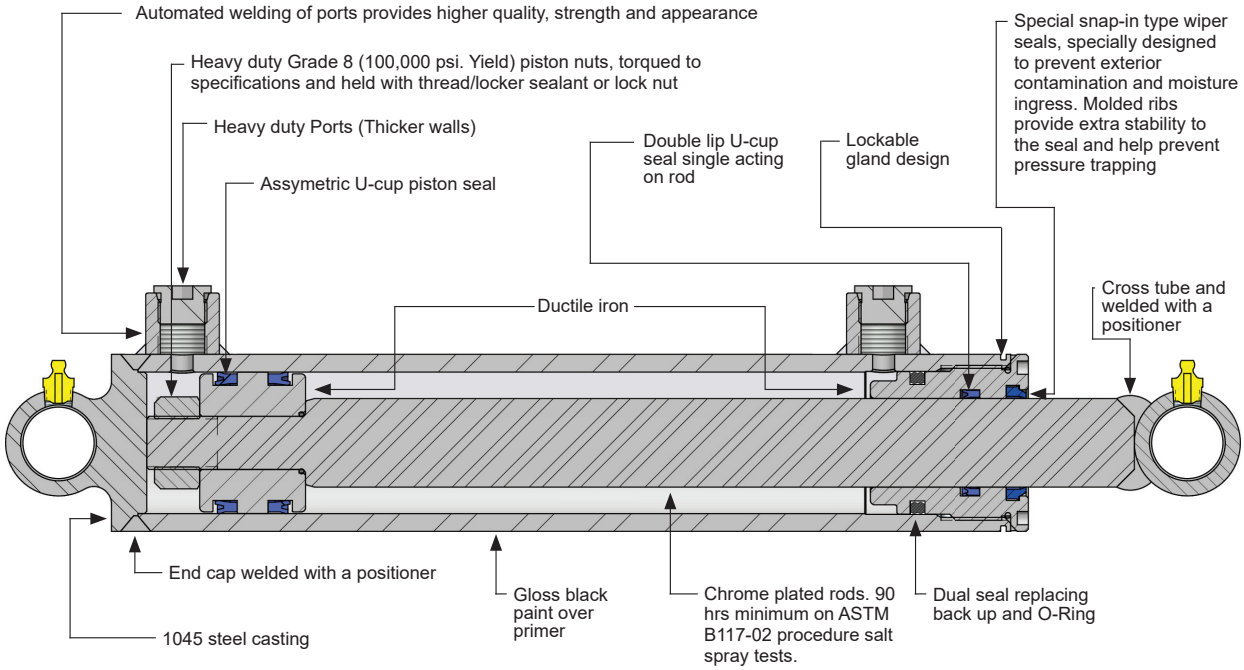

SEAL TEMPERATURE RANGE : -30°C / +100°C (-22°F / +212°F)
SEAL MAXIMUM SPEED : 3 FT / SEC

ALL SEALS ARE TOP GRADE/FIRST QUALITY NORTH AMERICAN MADE

ALL COMPONENTS ARE CNC MACHINED FOR HIGHER ACCURACY AND CONFORMITY

QUALITY CONTROLLED IN CHINA BY QUALIFIED CANADIAN TECHNICIANS

100% TESTED. ALL CYLINDERS ARE SUBMITTED TO STATIC AND DYNAMIC PRESSURE TESTS TO RECOMMENDED SPECIFICATIONS

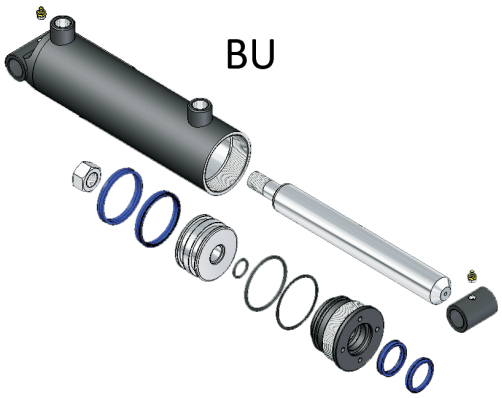

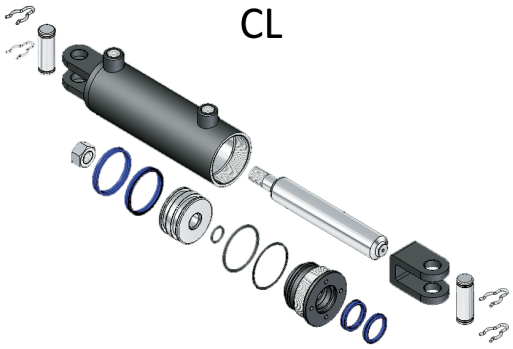

WELDED CYLINDERS - THREADED CLEVIS TYPE

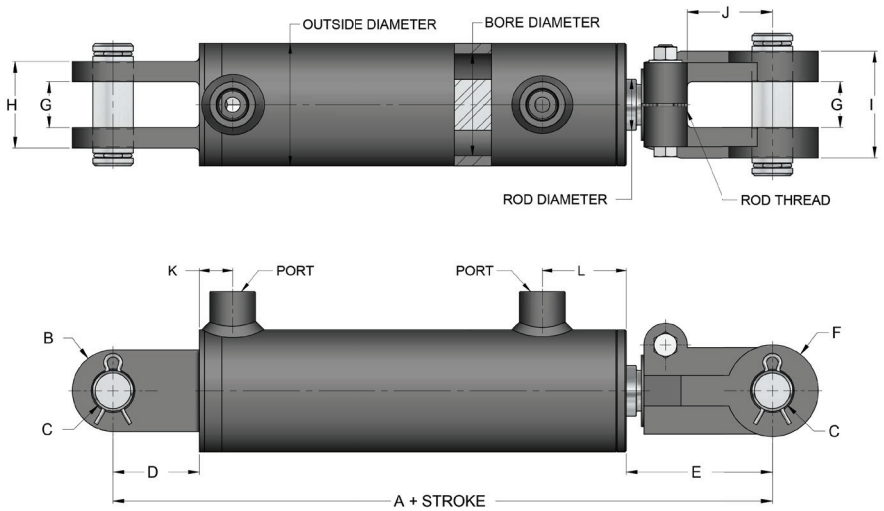

MODEL CODE	CYLINDER BORE	OUTSIDE DIAMETER	ROD DIAMETER	ROD THREAD	*A	B	C	D	*E	F	G	H	I	J	K	L	PORT SIZE*
TCL15XX-S	1.50	1.875	1.00	7/8-14 UNF	10.25	1.5	0.76	1.62	4.50	1.6	0.87	2.44	2.00	1.62	0.93	1.87	SAE-06
TCL20XX-S	2.00	2.375	1.12	1 1/8-12 UNF	10.25	2.0	1.01	2.00	3.62	2.0	1.14	2.44	2.50	2.12	0.81	2.06	SAE-08
TCL25XX-S	2.50	2.875	1.25	1 1/8-12 UNF	10.25	2.0	1.01	2.00	3.62	2.0	1.14	2.72	2.72	2.12	0.81	2.06	SAE-08
TCL30XX-S	3.00	3.50	1.50	1 1/4-12 UNF	10.25	2.0	1.01	2.00	3.62	2.0	1.14	2.72	2.72	2.12	0.87	2.18	SAE-08
TCL35XX-S	3.50	4.00	1.75	1 1/2-12 UNF	10.25	2.0	1.01	2.00	3.62	2.0	1.14	2.72	2.72	2.12	0.93	2.18	SAE-08
TCL40XX-S	4.00	4.50	2.00	1 1/2-12 UNF	10.25	2.0	1.01	2.12	3.62	2.0	1.14	2.72	2.95	2.12	1.00	2.18	SAE-08

FOR 2" TO 4" BORE, 8" STROKE : A = 12.25", E = 5.12"
* NPT PORTS ARE ALSO AVAILABLE FROM 1.5" TO 4" BORE CYLINDERS
MAXIMUM RETRACTED WORKING PRESSURE : 3000 PSI
MAXIMUM EXTENDED WORKING PRESSURE : SEE TABLE
RETRACTED AND STROKE TOLERANCE ± 1/8"

MODEL CODE	BORE X STROKE	DIMENSIONS		ROD DIAMETER	PIN SIZE	PORT SIZE*	COLUMN LOADS (LBS)	PRESSURE (PSI)	WEIGHT (LBS)
		RETRACTED	EXTENDED						
TCL1504-S	1.5” X 4”	14-1/4”	18-1/4”	1”	3/4”	SAE-06	5300	3000	10
TCL1506-S	1.5” X 6”	16-1/4”	22-1/4”				5300	3000	11
TCL1508-S	1.5” X 8”	18-1/4”	26-1/4”				5300	3000	12
TCL1508-ASAE*	1.5” X 8”	20-1/4”	28-1/4”				5300	3000	13
TCL1510-S	1.5” X 10”	20-1/4”	30-1/4”				5300	3000	13
TCL1512-S	1.5” X 12”	22-1/4”	34-1/4”				5300	3000	15
TCL1514-S	1.5” X 14”	24-1/4”	38-1/4”				5300	3000	16
TCL1516-S	1.5” X 16”	26-1/4”	42-1/4”				5200	2900	17
TCL1518-S	1.5” X 18”	28-1/4”	46-1/4”				4400	2400	18
TCL1520-S	1.5” X 20”	30-1/4”	50-1/4”				3700	2100	20
TCL1524-S	1.5” X 24”	34-1/4”	58-1/4”				2700	1500	22
TCL1528-S	1.5” X 28”	38-1/4”	66-1/4”				2100	1200	25
TCL1530-S	1.5” X 30”	40-1/4”	70-1/4”				1900	1000	26
TCL1532-S	1.5” X 32”	42-1/4”	74-1/4”				1700	900	27
TCL1534-S	1.5” X 34”	44-1/4”	78-1/4”				1500	800	28
TCL1536-S	1.5” X 36”	46-1/4”	82-1/4”				1300	700	29

* ASAE = AMERICAN SOCIETY OF AGRICULTURE ENGINEERS
DESIGNATES AN INDUSTRY MOUNTING STANDARD FOR 8” AND 16” STROKE CYLINDERS

WELDED CYLINDERS - THREADED CLEVIS TYPE

MODEL CODE	BORE X STROKE	DIMENSIONS		ROD DIAMETER	PIN SIZE	PORT SIZE*	COLUMN LOADS (LBS)	PRESSURE (PSI)	WEIGHT (LBS)
		RETRACTED	EXTENDED						
TCL2004-S	2” X 4”	14-1/4”	18-1/4”	1-1/8”	1”	SAE-08	9400	3000	16
TCL2006-S	2” X 6”	16-1/4”	22-1/4”				9400	3000	17
TCL2008-S	2” X 8”	18-1/4”	26-1/4”				9400	3000	19
TCL2008-ASAE*	2” X 8”	20-1/4”	28-1/4”				9400	3000	19
TCL2010-S	2” X 10”	20-1/4”	30-1/4”				9400	3000	20
TCL2012-S	2” X 12”	22-1/4”	34-1/4”				9400	3000	22
TCL2014-S	2” X 14”	24-1/4”	38-1/4”				9400	3000	23
TCL2016-S	2” X 16”	26-1/4”	42-1/4”				8400	2600	25
TCL2018-S	2” X 18”	28-1/4”	46-1/4”				7000	2200	27
TCL2020-S	2” X 20”	30-1/4”	50-1/4”				5900	1900	28
TCL2024-S	2” X 24”	34-1/4”	58-1/4”				4400	1400	31
TCL2030-S	2” X 30”	40-1/4”	70-1/4”				3000	900	36
TCL2036-S	2” X 36”	46-1/4”	82-1/4”				2200	700	41
TCL2504-S	2.5” X 4”	14-1/4”	18-1/4”	1-1/4”	1”	SAE-08	14700	3000	19
TCL2506-S	2.5” X 6”	16-1/4”	22-1/4”				14700	3000	20
TCL2508-S	2.5” X 8”	18-1/4”	26-1/4”				14700	3000	22
TCL2508-ASAE*	2.5” X 8”	20-1/4”	28-1/4”				14700	3000	23
TCL2510-S	2.5” X 10”	20-1/4”	30-1/4”				14700	3000	24
TCL2512-S	2.5” X 12”	22-1/4”	34-1/4”				14700	3000	26
TCL2514-S	2.5” X 14”	24-1/4”	38-1/4”				14700	3000	28
TCL2516-S	2.5” X 16”	26-1/4”	42-1/4”				12800	2600	30
TCL2518-S	2.5” X 18”	28-1/4”	46-1/4”				10700	2100	32
TCL2520-S	2.5” X 20”	30-1/4”	50-1/4”				9100	1800	34
TCL2524-S	2.5” X 24”	34-1/4”	58-1/4”				6700	1300	38
TCL2530-S	2.5” X 30”	40-1/4”	70-1/4”				4600	900	44
TCL2536-S	2.5” X 36”	46-1/4”	82-1/4”				3400	600	49
TCL3004-S	3” X 4”	14-1/4”	18-1/4”	1-1/2”	1”	SAE-08	21200	3000	24
TCL3006-S	3” X 6”	16-1/4”	22-1/4”				21200	3000	26
TCL3008-S	3” X 8”	18-1/4”	26-1/4”				21200	3000	29
TCL3008-ASAE*	3” X 8”	20-1/4”	28-1/4”				21200	3000	29
TCL3010-S	3” X 10”	20-1/4”	30-1/4”				21200	3000	31
TCL3012-S	3” X 12”	22-1/4”	34-1/4”				21200	3000	33
TCL3014-S	3” X 14”	24-1/4”	38-1/4”				21200	3000	36
TCL3016-S	3” X 16”	26-1/4”	42-1/4”				21200	3000	38
TCL3016-ASAE*	3” X 16”	31-1/2”	47-1/2”				21200	3000	38
TCL3018-S	3” X 18”	28-1/4”	46-1/4”				21200	3000	41
TCL3020-S	3” X 20”	30-1/4”	50-1/4”				18800	2600	43
TCL3024-S	3” X 24”	34-1/4”	58-1/4”				14000	1900	48
TCL3030-S	3” X 30”	40-1/4”	70-1/4”				9600	1300	56
TCL3036-S	3” X 36”	46-1/4”	82-1/4”				7000	900	63

COLUMN LOAD IS THE MAXIMUM PUSHING LOAD SUGGESTED USING A MINIMUM SAFETY FACTOR OF 2 AND BASED ON A PIN TO PIN MOUNTING CALCULATION.

* ASAE = AMERICAN SOCIETY OF AGRICULTURE ENGINEERS
DESIGNATES AN INDUSTRY MOUNTING STANDARD FOR 8” AND 16” STROKE CYLINDERS

WELDED CYLINDERS - THREADED CLEVIS TYPE

MODEL CODE	BORE X STROKE	DIMENSIONS		ROD DIAMETER	PIN SIZE	PORT SIZE*	COLUMN LOADS (LBS)	PRESSURE (PSI)	WEIGHT (LBS)
		RETRACTED	EXTENDED						
TCL3504-S	3.5” X 4”	14-1/4”	18-1/4”	1-3/4”	1”	SAE-08	28800	3000	29
TCL3506-S	3.5” X 6”	16-1/4”	22-1/4”				28800	3000	32
TCL3508-S	3.5” X 8”	18-1/4”	26-1/4”				28800	3000	35
TCL3508-ASAE*	3.5” X 8”	20-1/4”	28-1/4”				28800	3000	36
TCL3510-S	3.5” X 10”	20-1/4”	30-1/4”				28800	3000	38
TCL3512-S	3.5” X 12”	22-1/4”	34-1/4”				28800	3000	41
TCL3514-S	3.5” X 14”	24-1/4”	38-1/4”				28800	3000	44
TCL3516-S	3.5” X 16”	26-1/4”	42-1/4”				28800	3000	47
TCL3516-ASAE*	3.5” X 16”	31-1/2”	47-1/2”				28800	3000	47
TCL3518-S	3.5” X 18”	28-1/4”	46-1/4”				28800	3000	50
TCL3520-S	3.5” X 20”	30-1/4”	50-1/4”				28800	3000	53
TCL3524-S	3.5” X 24”	34-1/4”	58-1/4”				26000	2700	59
TCL3530-S	3.5” X 30”	40-1/4”	70-1/4”				17900	1800	68
TCL3536-S	3.5” X 36”	46-1/4”	82-1/4”				13000	1300	77
TCL4004-S	4” X 4”	14-1/4”	18-1/4”	2”	1”	SAE-08	37600	3000	35
TCL4006-S	4” X 6”	16-1/4”	22-1/4”				37600	3000	38
TCL4008-S	4” X 8”	18-1/4”	26-1/4”				37600	3000	42
TCL4008-ASAE*	4” X 8”	20-1/4”	28-1/4”				37600	3000	43
TCL4010-S	4” X 10”	20-1/4”	30-1/4”				37600	3000	46
TCL4012-S	4” X 12”	22-1/4”	34-1/4”				37600	3000	49
TCL4014-S	4” X 14”	24-1/4”	38-1/4”				37600	3000	53
TCL4016-S	4” X 16”	26-1/4”	42-1/4”				37600	3000	57
TCL4016-ASAE*	4” X 16”	31-1/2”	47-1/2”				37600	3000	57
TCL4018-S	4” X 18”	28-1/4”	46-1/4”				37600	3000	60
TCL4020-S	4” X 20”	30-1/4”	50-1/4”				37600	3000	64
TCL4024-S	4” X 24”	34-1/4”	58-1/4”				37600	3000	71
TCL4030-S	4” X 30”	40-1/4”	70-1/4”				30500	2400	82
TCL4036-S	4” X 36”	46-1/4”	82-1/4”				22200	1700	93

COLUMN LOAD IS THE MAXIMUM PUSHING LOAD SUGGESTED USING A MINIMUM SAFETY FACTOR OF 2 AND BASED ON A PIN TO PIN MOUNTING CALCULATION.

* ASAE = AMERICAN SOCIETY OF AGRICULTURE ENGINEERS
DESIGNATES AN INDUSTRY MOUNTING STANDARD FOR 8” AND 16” STROKE CYLINDERS

WELDED CYLINDERS - THREADED CLEVIS TYPE

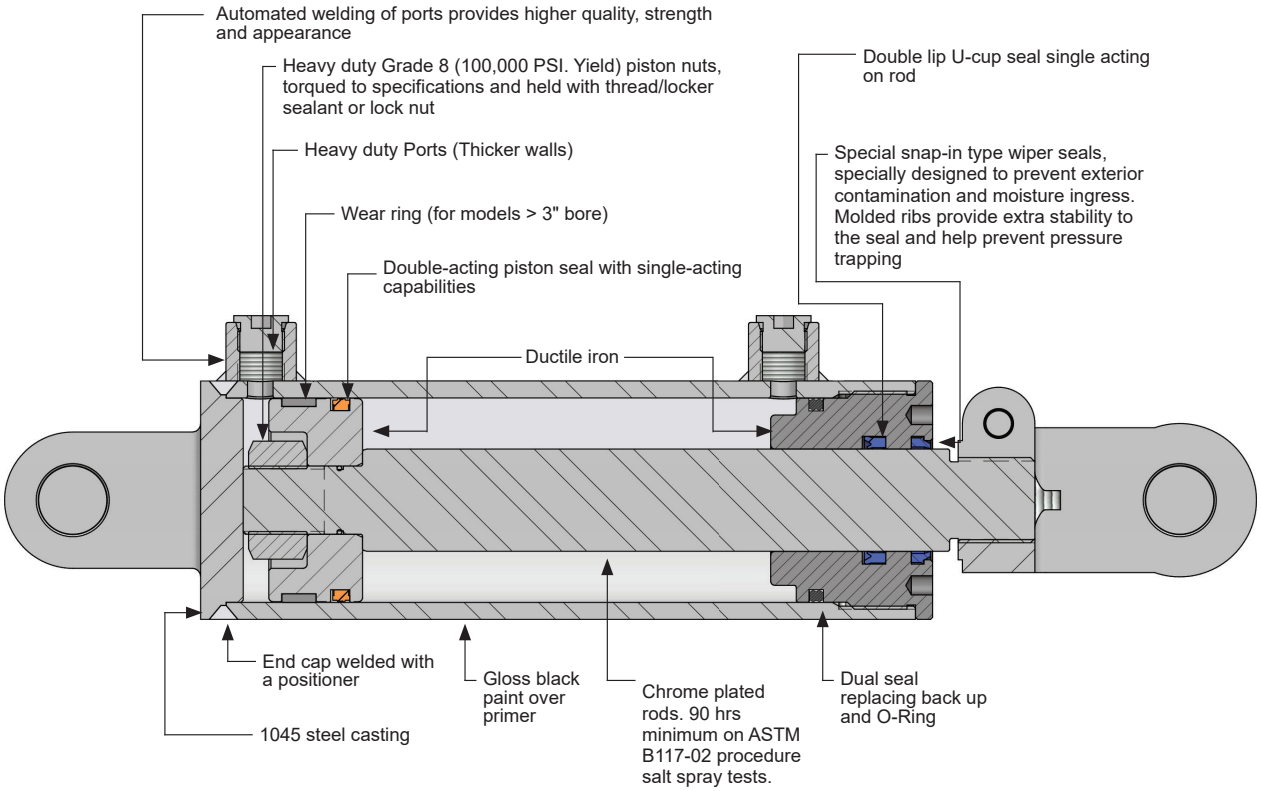

SEAL TEMPERATURE RANGE : -30°C / +100°C (-22°F / +212°F)
SEAL MAXIMUM SPEED : 3 FT / SEC

All seals are top grade/first quality North American made

All components are CNC machined for higher accuracy and conformity

Quality controlled in China by qualified Canadian technicians

100% tested. All cylinders are submitted to static and dynamic pressure tests to recommended specifications

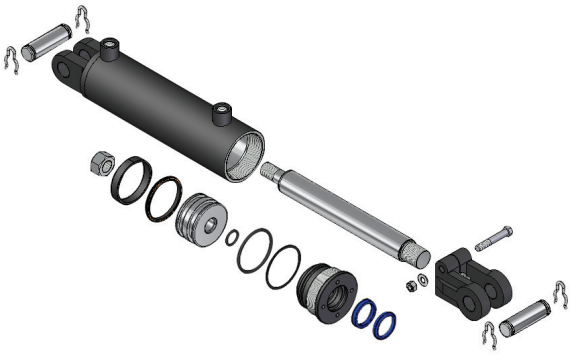

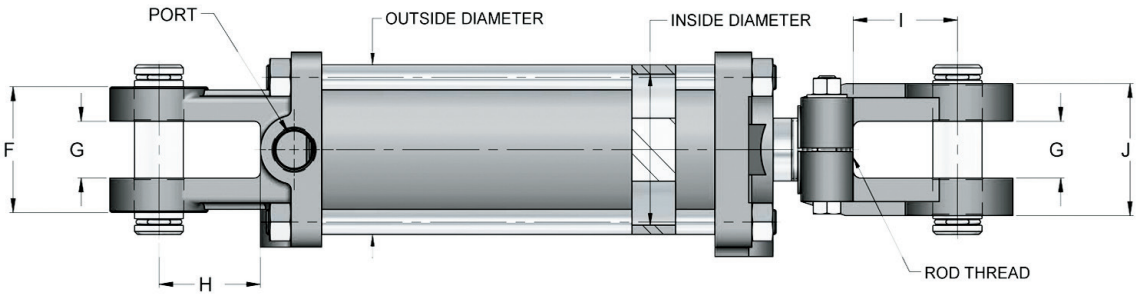

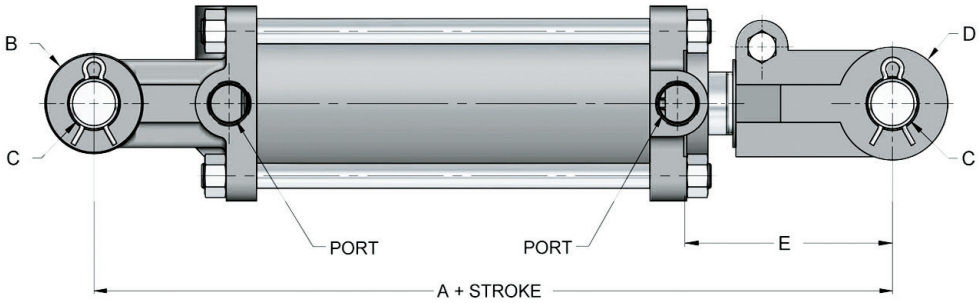

MODEL CODE	CYLINDER BORE	OUTSIDE DIAMETER	ROD THREAD	A2	B	C3	D4	E5	F	G	H	I	J4	PORT SIZE
TR2.5-20XX-S	2.00	2.38	1 1/8-12 UNF	10.25	2.00	1.01	2.00	4.17	2.44	1.14	2.00	2.12	2.50	SAE-08
TR2.5-25XX-S	2.50	2.89	1 1/8-12 UNF	10.25	2.00	1.01	2.00	4.17	2.44	1.14	2.00	2.12	2.50	SAE-08
TR2.5-30XX-S	3.00	3.39	1 1/4-12 UNF	10.25	2.00	1.01	2.00	4.14	2.72	1.14	2.00	2.12	2.72	SAE-08
TR2.5-35XX-S	3.50	3.87	1 1/4-12 UNF	10.25	2.00	1.01	2.00	4.09	2.72	1.14	2.00	2.12	2.72	SAE-08
TR2.5-40XX-S	4.00	4.50	1 1/4-12 UNF	10.25	2.00	1.01	2.00	3.82	2.72	1.14	2.12	2.12	2.72	SAE-08

1. FOR TR2.5-2518 TO TR2.5-2536: ROD THREAD= 1.250-12 UNF
2. FOR 8.00" ASAE STROKE: A= 12.25"
FOR 16.00" ASAE STROKE: A= 15.50"
3. FOR 16.00" ASAE STROKE: C= 1.26"
4. FOR TR2.5-4016-ASAE TO TR2.5-4036: D= 2.50" J=2.75" ROD THREAD= 1.500-12 UNF
5. FOR 8.00" ASAE STROKE: E= 5.75" (2.00" TO 3.00" BORE) E=5.62" (3.50" BORE) E=5.56" (4.00" BORE)
FOR 16.00" ASAE STROKE: E= 9.00" (2.00" TO 3.00" BORE) E=8.87" (3.50" BORE) E=8.81" (4.00" BORE)
MAXIMUM RETRACTED WORKING PRESSURE= 2500 psi
MAXIMUM EXTENDED WORKING PRESSURE= SEE TABLE
FOR ALL CYLINDER, RETRACTED TOLERANCE ± 1/8"

MODEL CODE	BORE X STROKE	DIMENSIONS		ROD DIAMETER	PIN SIZE	PORT SIZE	COLUMN LOADS (LBS)	PRESSURE (PSI)	WEIGHT (LBS)
		RETRACTED	EXTENDED						
TR2.5-2004-S	2" X 4"	14 1/4"	18 1/4"	1-1/8"	1"	SAE-08	7800	2500	16
TR2.5-2006-S	2" X 6"	16 1/4"	22 1/4"				7800	2500	17
TR2.5-2008-S	2" X 8"	18 1/4"	26 1/4"				7800	2500	19
TR2.5-2008-ASAE-S*	2" X 8"	20 1/4"	28 1/4"				7800	2500	20
TR2.5-2010-S	2" X 10"	20 1/4"	30 1/4"				7800	2500	20
TR2.5-2012-S	2" X 12"	22 1/4"	34 1/4"				7800	2500	22
TR2.5-2014-S	2" X 14"	24 1/4"	38 1/4"				7800	2500	24
TR2.5-2016-S	2" X 16"	26 1/4"	42 1/4"				7800	2500	25
TR2.5-2018-S	2" X 18"	28 1/4"	46 1/4"				7000	2200	27
TR2.5-2020-S	2" X 20"	30 1/4"	50 1/4"				5900	1900	28
TR2.5-2024-S	2" X 24"	34 1/4"	58 1/4"				4400	1400	31
TR2.5-2030-S	2" X 30"	40 1/4"	70 1/4"				3000	900	36
TR2.5-2036-S	2" X 36"	46 1/4"	82 1/4"				2200	700	41
TR2.5-2040-S	2" X 40"	50 1/4"	90 1/4"				1700	500	44
TR2.5-2048-S	2" X 48"	58 1/4"	106 1/4"				1300	400	49

COLUMN LOAD IS THE MAXIMUM PUSHING LOAD SUGGESTED USING A MINIMUM SAFETY FACTOR OF 2 AND BASED ON A PIN TO PIN MOUNTING CALCULATION.

* ASAE = AMERICAN SOCIETY OF AGRICULTURE ENGINEERS
DESIGNATES AN INDUSTRY MOUNTING STANDARD FOR 8" AND 16" STROKE CYLINDERS

TIE-ROD CYLINDERS - 2500 PSI

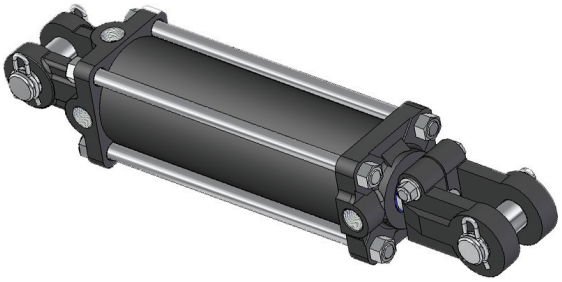

MODEL CODE	BORE X STROKE	DIMENSIONS		ROD DIAMETER	PIN SIZE	PORT SIZE	COLUMN LOADS (LBS)	PRESSURE (PSI)	WEIGHT (LBS)
		RETRACTED	EXTENDED						
TR2.5-2504-S	2.5” X 4”	14 1/4”	18 1/4”	1-1/8”	1”	SAE-08	12200	2500	19
TR2.5-2506-S	2.5” X 6”	16 1/4”	22 1/4”				12200	2500	21
TR2.5-2508-S	2.5” X 8”	18 1/4”	26 1/4”				12200	2500	22
TR2.5-2508-ASAE-S*	2.5” X 8”	20 1/4”	28 1/4”				12200	2500	23
TR2.5-2510-S	2.5” X 10”	20 1/4”	30 1/4”				12200	2500	24
TR2.5-2512-S	2.5” X 12”	22 1/4”	34 1/4”				12200	2500	26
TR2.5-2514-S	2.5” X 14”	24 1/4”	38 1/4”				10300	2100	28
TR2.5-2516-S	2.5” X 16”	26 1/4”	42 1/4”				8400	1700	29
TR2.5-2518-S	2.5” X 18”	28 1/4”	46 1/4”				7000	1400	32
TR2.5-2520-S	2.5” X 20”	30 1/4”	50 1/4”				5900	1200	34
TR2.5-2524-S	2.5” X 24”	34 1/4”	58 1/4”				4400	900	38
TR2.5-2530-S	2.5” X 30”	40 1/4”	70 1/4”	1-1/4”			4400	900	43
TR2.5-2536-S	2.5” X 36”	46 1/4”	82 1/4”				3400	600	49
TR2.5-2540-S	2.5” X 40”	50 1/4”	90 1/4”				2700	500	54
TR2.5-2548-S	2.5” X 48”	58 1/4”	106 1/4”				2000	400	60
TR2.5-3004-S	3” X 4”	14 1/4”	18 1/4”	1-1/4”	1”	SAE-08	17600	2500	24
TR2.5-3006-S	3” X 6”	16 1/4”	22 1/4”				17600	2500	26
TR2.5-3008-S	3” X 8”	18 1/4”	26 1/4”				17600	2500	28
TR2.5-3008-ASAE-S*	3” X 8”	20 1/4”	28 1/4”				17600	2500	29
TR2.5-3010-S	3” X 10”	20 1/4”	30 1/4”				17600	2500	30
TR2.5-3012-S	3” X 12”	22 1/4”	34 1/4”				17600	2500	33
TR2.5-3014-S	3” X 14”	24 1/4”	38 1/4”				15700	2200	35
TR2.5-3016-S	3” X 16”	26 1/4”	42 1/4”				12800	1800	37
TR2.5-3016-ASAE-S*	3” X 16”	31 1/2”	47 1/2”	1-1/2”	1-1/4”		9200	1300	42
TR2.5-3018-S	3” X 18”	28 1/4”	46 1/4”	1-1/4”	1”		11300	1600	42
TR2.5-3020-S	3” X 20”	30 1/4”	50 1/4”				9200	1300	44
TR2.5-3024-S	3” X 24”	34 1/4”	58 1/4”				6700	900	49
TR2.5-3030-S	3” X 30”	40 1/4”	70 1/4”	1-1/2”			9600	1300	57
TR2.5-3036-S	3” X 36”	46 1/4”	82 1/4”				7000	900	65
TR2.5-3040-S	3” X 40”	50 1/4”	90 1/4”				5700	800	70
TR2.5-3048-S	3” X 48”	58 1/4”	106 1/4”				3900	500	80
TR2.5-3504-S	3.5” X 4”	14 1/4”	18 1/4”	1 1/4”	1”	SAE-08	24000	2500	29
TR2.5-3506-S	3.5” X 6”	16 1/4”	22 1/4”				24000	2500	32
TR2.5-3508-S	3.5” X 8”	18 1/4”	26 1/4”				24000	2500	34
TR2.5-3508-ASAE-S*	3.5” X 8”	20 1/4”	28 1/4”				24000	2500	35
TR2.5-3510-S	3.5” X 10”	20 1/4”	30 1/4”				24000	2500	37
TR2.5-3512-S	3.5” X 12”	22 1/4”	34 1/4”				19600	2000	39
TR2.5-3514-S	3.5” X 14”	24 1/4”	38 1/4”				15700	1600	42
TR2.5-3516-S	3.5” X 16”	26 1/4”	42 1/4”				12800	1300	44
TR2.5-3516-ASAE-S*	3.5” X 16”	31 1/2”	47 1/2”		1 1/4”		21100	2100	50
TR2.5-3518-S	3.5” X 18”	28 1/4”	46 1/4”	1 1/4”	1”		10700	1100	47
TR2.5-3520-S	3.5” X 20”	30 1/4”	50 1/4”				9100	900	49
TR2.5-3524-S	3.5” X 24”	34 1/4”	58 1/4”	1 1/2”			14000	1400	58
TR2.5-3530-S	3.5” X 30”	40 1/4”	70 1/4”				9600	1000	66
TR2.5-3536-S	3.5” X 36”	46 1/4”	82 1/4”				7000	700	74
TR2.5-3540-S	3.5” X 40”	50 1/4”	90 1/4”				5800	600	80
TR2.5-3548-S	3.5” X 48”	58 1/4”	1061/4”				3900	400	91

COLUMN LOAD IS THE MAXIMUM PUSHING LOAD SUGGESTED USING A MINIMUM SAFETY FACTOR OF 2 AND BASED ON A PIN TO PIN MOUNTING CALCULATION.

* ASAE = AMERICAN SOCIETY OF AGRICULTURE ENGINEERS
DESIGNATES AN INDUSTRY MOUNTING STANDARD FOR 8” AND 16” STROKE CYLINDERS

TIE-ROD CYLINDERS - 2500 PSI

MODEL CODE	BORE X STROKE	DIMENSIONS		ROD DIAMETER	PIN SIZE	PORT SIZE	COLUMN LOADS (LBS)	PRESSURE (PSI)	WEIGHT (LBS)
		RETRACTED	EXTENDED						
TR2.5-4004-S	4" X 4"	14 1/4"	18 1/4"	1 1/2"	1"	SAE-08	31400	2500	33
TR2.5-4006-S	4" X 6"	16 1/4"	22 1/4"				31400	2500	36
TR2.5-4008-S	4" X 8"	18 1/4"	26 1/4"				31400	2500	38
TR2.5-4008-ASAE-S*	4" X 8"	20 1/4"	28 1/4"				31400	2500	39
TR2.5-4010-S	4" X 10"	20 1/4"	30 1/4"				31400	2500	41
TR2.5-4012-S	4" X 12"	22 1/4"	34 1/4"				31400	2500	44
TR2.5-4014-S	4" X 14"	24 1/4"	38 1/4"				31400	2500	46
TR2.5-4016-S	4" X 16"	26 1/4"	42 1/4"				26700	2100	49
TR2.5-4016-ASAE-S*	4" X 16"	31 1/2"	47 1/2"	2"	1 1/4"		31400	2500	63
TR2.5-4018-S	4" X 18"	28 1/4"	46 1/4"	1 1/2"	1"		22300	1700	55
TR2.5-4020-S	4" X 20"	30 1/4"	50 1/4"				18800	1500	58
TR2.5-4024-S	4" X 24"	34 1/4"	58 1/4"				14000	1100	64
TR2.5-4024-175-S	4" X 24"	34 1/4"	58 1/4"	1 3/4"			26000	2050	68
TR2.5-4024-200-S	4" X 24"	34 1/4"	58 1/4"	2"			31400	2500	73
TR2.5-4030-S	4" X 30"	40 1/4"	70 1/4"				30500	2400	84
TR2.5-4036-S	4" X 36"	46 1/4"	82 1/4"				22200	1700	95
TR2.5-4040-S	4" X 40"	50 1/4"	90 1/4"				18200	1400	103
TR2.5-4048-S	4" X 48"	58 1/4"	106 1/4"				13200	1000	118

COLUMN LOAD IS THE MAXIMUM PUSHING LOAD SUGGESTED USING A MINIMUM SAFETY FACTOR OF 2 AND BASED ON A PIN TO PIN MOUNTING CALCULATION.

* ASAE = AMERICAN SOCIETY OF AGRICULTURE ENGINEERS
DESIGNATES AN INDUSTRY MOUNTING STANDARD FOR 8" AND 16" STROKE CYLINDERS

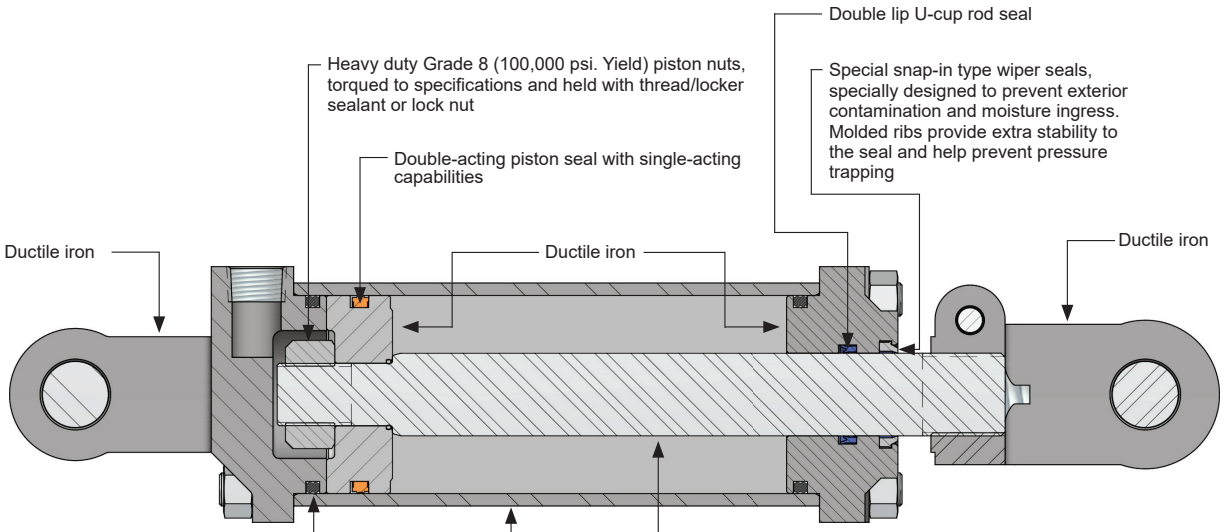

SEAL TEMPERATURE RANGE: -30˚C / +100˚C (-22˚F / +212˚F)
SEAL MAXIMUM SPEED: 3 FT / SEC

All seals are top grade/first quality North American made

All components are CNC machined for higher accuracy and conformity

Quality controlled in China by qualified Canadian technicians

100% tested. All cylinders are submitted to static and dynamic pressure tests to recommended specifications

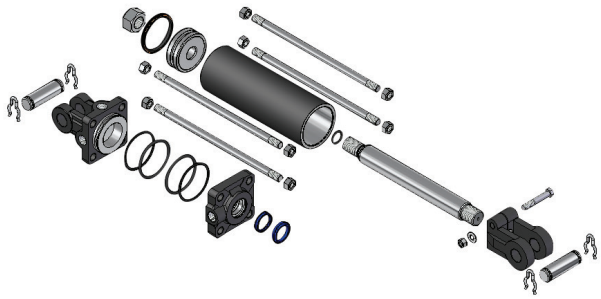

SINGLE ACTING - INVERTED

TELESCOPIC CYLINDERS HAVE MULTIPLE STAGES TO PROVIDE LONGER STROKE LENGHT IN A SMALLER OVERALL CYLINDER PROFILE. THIS ALLOWS FOR GREAT LIFT AND MECHANICAL ADVANTAGE WHEN USED IN DUMPING APPLICATIONS. THE CHIEF LINE OF TELESCOPICS IS ENGINEERES FOR INVERTED, SINGLE ACTING DUMP TRAILERS

FEATURES:
- MULTIPLE STAGES ENABLE LONGER STROKE TO BE ACHIEVED USING LESS SPACE
- TRUNNION MOUNT WITH ANGULAR SWIVELS TO ALLOW A SMALL AMOUNT OF MISALIGNMENT
- HONED AND CHROME PLATED SECTIONS TO DECREASE CORROSION & INCREASE WEAR RESISTANCE

SPECIFICATIONS:
- MAXIMUM PRESSURE: 2500 PSI
- PORT SIZE: SAE-08

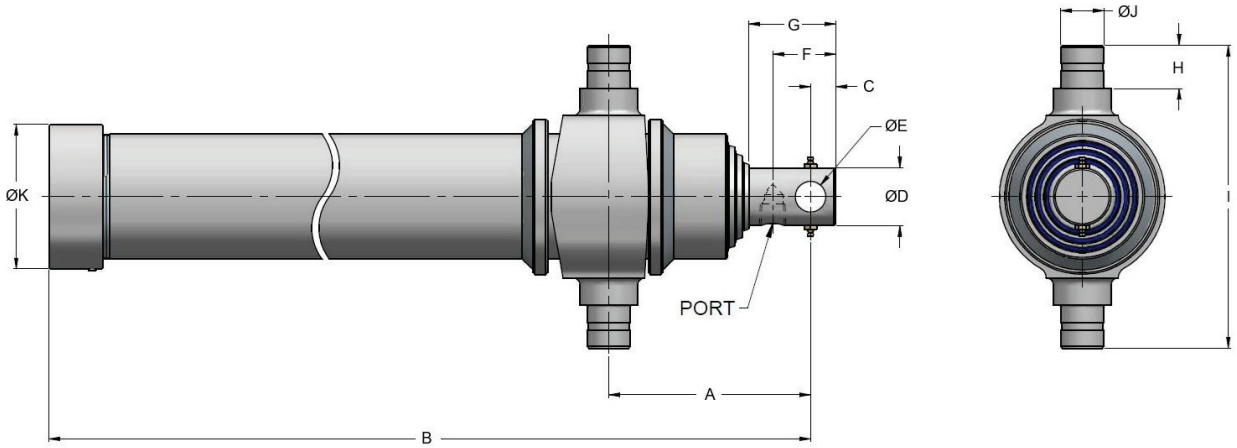

BAILEY PART NO	MODEL CODE	CAPACITY TONS	STROKE (IN)	DIMENSIONS (IN)												WEIGHT (LBS)
				A		B	C	D	E	F	G	H	I	J	K	
				RETRACTED	EXTENDED											
210800	TC-07833-S	7	78	7.0	85.0	35.1	1.0	2.0	1.015	2.1	3.5	1.25	9.0	1.25	4.33	83
210801	TC-09033-S		90		97.0	39.8										100
210802	TC-10833-S		108		115.0	45.4										114
210803	TC-07843-S	12	78	7.0	85.0	35.5	1.0	2.0	1.015	2.1	3.5	1.50	10.50	1.50	5.04	135
210804	TC-09043-S		90		97.0	39.5										140
210805	TC-10843-S		108		115.0	45.5										151
210806	TC-12043-S		120		127.0	49.5										160

BRACKETS

BAILEY PART NO	MODEL CODE	DESCRIPTION	WEIGHT (LBS)
792197	TC-S07	BOX BRACKET KIT FOR 7 TONS CYLINDERS (NEED 2 PER TRAILER)	3.5
792185	TC-S12	BOX BRACKET KIT FOR 12 TONS CYLINDERS (NEED 2 PER TRAILER)	3.5
	TC-S07-PAIR	BOX BRACKET KIT FOR 7 TONS CYLINDERS (COME IN PAIR)	10.0
	TC-S12-PAIR	BOX BRACKET KIT FOR 12 TONS CYLINDERS (COME IN PAIR)	10.0
325060	TC-SB	FRAME BRACKET FOR 7 AND 12 TONS CYLINDERS	40.0

BOX BRACKET
TC-S07& TC-S12
NEED 2 PER TRAILER

BOX BRACKET
TC-S07-PAIR & TC-S12-PAIR
COME IN PAIR

FRAME BRACKET
TC-SB

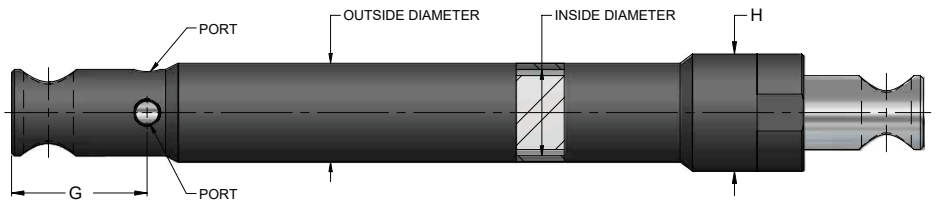

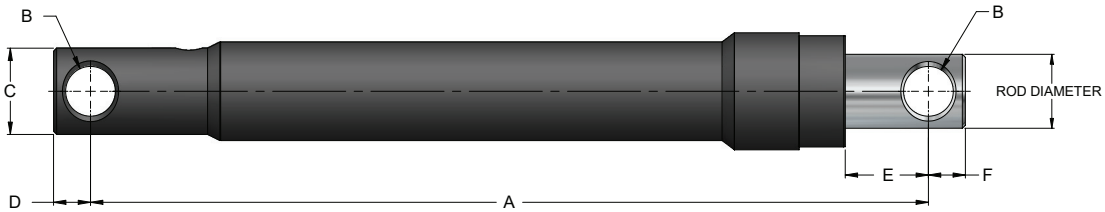

MODEL CODE	EQUIVALENT	BORE X STROKE	OUTSIDE DIAMETER	ROD DIAMETER	DIMENSIONS (IN)								PORT SIZE	WEIGHT (LBS)
					A	B	C	D	E	F	G	H		
ASP-1510-0750	ARCTIC	1.75” X 10”	2.0	1.5	17.00	0.76	1.75	0.75	1.68	0.75	2.75	2.37	1/4-NPT	12
ASP-1512-0750	ARCTIC	1.75” X 12”	2.0	1.5	19.00	0.76	1.75	0.75	1.68	0.75	2.75	2.37	1/4-NPT	13
FSP-1510-1000	FISHER	1.75” X 10”	2.0	1.5	17.00	1.01	1.75	0.75	1.68	0.75	2.75	2.37	1/4-NPT	11
FSP-1512-1000	FISHER	1.75” X 12”	2.0	1.5	19.25	1.01	1.75	0.75	1.93	0.75	2.75	2.37	1/4-NPT	13
FSP-2016-1250	FISHER	2.25” X 16”	2.5	2.0	23.25	1.26	2.25	0.87	1.75	0.87	2.75	3.00	1/4-NPT	27
MSP-1506-0625	MEYER	1.75” X 6”	2.0	1.5	12.37	0.63	1.62	0.75	1.56	0.75	2.12	2.37	1/4-NPT	9
MSP-1510-0625	MEYER	1.75” X 10”	2.0	1.5	16.18	0.63	1.62	0.75	1.62	0.75	2.12	2.37	1/4-NPT	14
MSP-1512-0625	MEYER	1.75” X 12”	2.0	1.5	18.00	0.63	1.62	0.75	1.43	0.75	2.12	2.37	1/4-NPT	15
MSP-2012-0625	MEYER	2.25” X 12”	2.5	2.0	18.00	0.63	1.62	0.75	0.75	0.75	2.25	3.00	1/4-NPT	24
WSP-1506-0750	WESTERN	1.75” X 6”	2.0	1.5	13.00	0.76	1.75	0.68	1.37	0.68	2.75	2.37	1/4-NPT	11
WSP-1508-0750	WESTERN	1.75” X 8”	2.0	1.5	15.25	0.76	1.75	0.68	1.62	0.68	2.75	2.37	1/4-NPT	12
WSP-1510-0750	WESTERN	1.75” X 10”	2.0	1.5	17.25	0.76	1.75	0.68	1.62	0.68	2.75	2.37	1/4-NPT	14
WSP-1510-1000	WESTERN	1.75” X 10”	2.0	1.5	17.00	1.01	1.75	0.75	1.43	0.75	2.75	2.37	1/4-NPT	14
WSP-2006-0750	WESTERN	2.25” X 6”	2.5	2.0	13.18	0.76	2.25	0.75	1.56	0.75	2.75	3.00	1/4-NPT	18
WSP-2010-1000	WESTERN	2.25” X 10”	2.5	2.0	17.25	1.01	2.25	0.75	1.62	0.75	2.75	3.00	1/4-NPT	22
WSP-2016-1000	WESTERN	2.25” X 16”	2.5	2.0	23.31	1.01	2.25	0.75	1.68	0.75	2.56	3.00	1/4-NPT	31

SEAL TEMPERATURE RANGE : -30˚C / +100˚C (-22˚F / +212˚F)
SEAL MAXIMUM SPEED : 3 FT / SEC
CYLINDER WITH 1 PORT = PORT IN LINE WITH PIN HOLE
RETRACTED AND STROKE TOLERANCE ± 1/8"

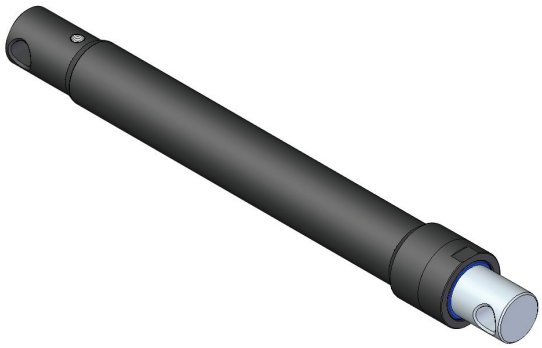

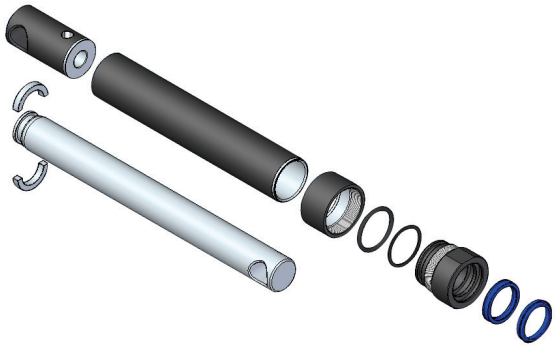

FEMALE CLEVIS

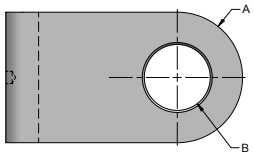

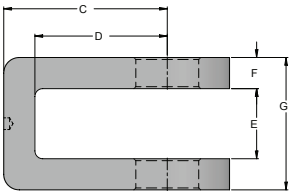

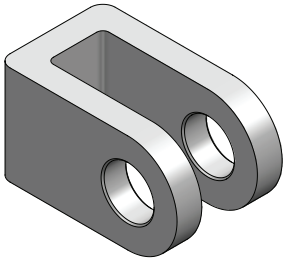

MODEL CODE	DIMENSIONS (IN)							MAXIMUM LOAD PUSH / PULL (LBS)
	A	B	C	D	E	F	G	
CL-100075-CLP	1.50	0.76	1.75	1.37	0.87	0.37	1.62	5300
CL-125100-CLP	2.00	1.01	2.62	2.12	1.12	0.50	2.12	22500
CL-175100-CLP	2.00	1.01	2.62	2.12	1.12	0.62	2.37	28100
CL-200100-CLP	2.00	1.01	2.62	2.00	1.12	0.62	2.37	28100
CL-250150-CLP	3.00	1.51	3.00	2.25	1.62	0.75	3.12	50600

MATERIAL : C1045 CAST STEEL
MAXIMUM PUSHING & PULLING FORCE ARE BASED ON A SUGGESTED MINIMUM SAFETY FACTOR OF 2

THREADED CLEVIS

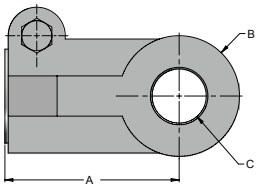

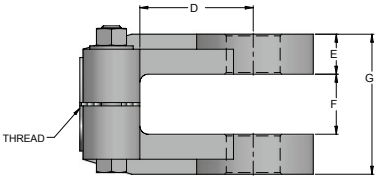

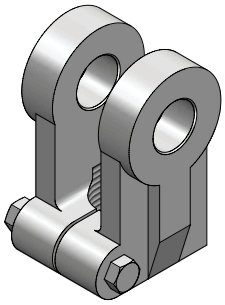

MODEL CODE	THREAD	DIMENSIONS (IN)							MAXIMUM LOAD PUSH / PULL (LBS)
		A	B	C	D	E	F	G	
ST-0870718-CVP	7/8-14 UNF	2.75	1.87	0.76	1.62	0.56	0.87	2.00	5300
ST-1121020-CVP	1 1/8-12 UNF	3.25	2.00	1.01	2.12	0.75	1.12	2.62	23000
ST-1121022-CVP	1 1/8-12 UNF	3.25	2.25	1.01	2.12	0.75	1.12	2.62	23000
ST-1121222-CVP	1 1/8-12 UNF	3.25	2.25	1.26	2.12	0.75	1.12	2.62	23000
ST-1251022-CVP	1 1/4-12 UNF	3.25	2.25	1.01	2.12	0.75	1.12	2.62	23000
ST-1311025-CVP	1 5/16-12 UN	3.25	2.50	1.01	2.12	0.81	1.12	2.75	33700
ST-1311225-CVP	1 5/16-12 UN	3.25	2.50	1.26	2.12	0.81	1.12	2.75	33700
ST-1501025-CVP	1 1/2-12 UNF	3.25	2.50	1.01	2.12	0.81	1.12	2.75	33700
ST-1501225-CVP	1 1/2-12 UNF	3.25	2.50	1.26	2.12	0.81	1.12	2.75	33700
ST-1501226-CVP	1 1/2-12 UNF	3.62	2.75	1.26	2.12	1.06	1.18	3.31	58900

MAXIMUM PUSHING & PULLING FORCE ARE BASED ON A SUGGESTED MINIMUM SAFETY FACTOR OF 2

WELDING PORTS

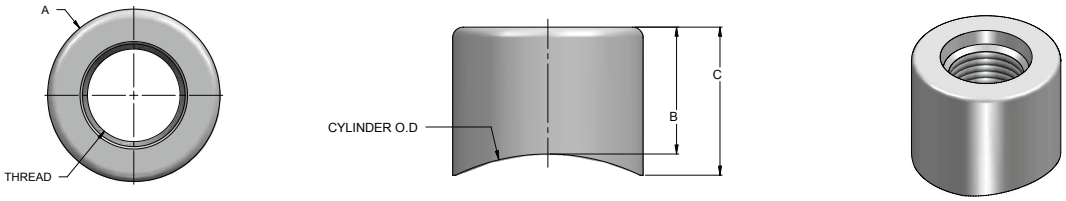

NPT PORTS

MODEL CODE	THREAD	DIMENSIONS (IN)			
		CYLINDER O.D.	A	B	C
025N-200062-POP	1/4 NPT	2.00	0.87	0.62	0.68
037N-250075-POP	3/8 NPT	2.50	1.12	0.75	0.87
050N-300087-POP	1/2 NPT	3.00	1.25	0.87	0.93
050N-350087-POP	1/2 NPT	3.50	1.25	0.87	0.93
050N-400087-POP	1/2 NPT	4.00	1.25	0.87	0.93
050N-450087-POP	1/2 NPT	4.50	1.25	0.87	0.93
075N-550100-POP	3/4 NPT	5.50	1.37	1.00	1.06

SAE PORTS

MODEL CODE	THREAD	DIMENSIONS (IN)			
		CYLINDER O.D.	A	B	C
04S-200062-POP	SAE-04	2.00	0.75	0.62	0.68
06S-250075-POP	SAE-06	2.50	1.00	0.75	0.81
08S-300093-POP	SAE-08	3.00	1.12	0.93	1.00
08S-350093-POP	SAE-08	3.50	1.12	0.93	1.00
08S-400093-POP	SAE-08	4.00	1.12	0.93	1.00
08S-450093-POP	SAE-08	4.50	1.12	0.93	1.00
12S-550100-POP	SAE-12	5.50	1.50	1.00	1.06

MATERIAL : C1020 STEEL
MAXIMUM OPERATING PRESSURE : 3000 psi (SAFETY FACTOR = 2)

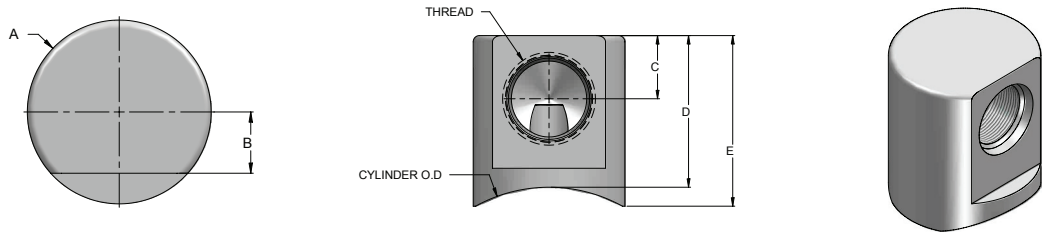

90 DEGREES PORTS

MODEL CODE	THREAD	DIMENSIONS (IN)					
		CYLINDER O.D.	A	B	C	D	E
025N-200112-90POP	1/4 NPT	2.00	1.12	0.37	0.43	1.12	1.25
037N-250125-90POP	3/8 NPT	2.50	1.25	0.43	0.50	1.25	1.37
050N-300150-90POP	1/2 NPT	3.00	1.62	0.50	0.62	1.50	1.68
050N-350150-90POP	1/2 NPT	3.50	1.62	0.50	0.62	1.50	1.62
050N-400150-90POP	1/2 NPT	4.00	1.62	0.50	0.62	1.50	1.62
050N-450150-90POP	1/2 NPT	4.50	1.62	0.50	0.62	1.50	1.62
075N-550200-90POP	3/4 NPT	5.50	2.12	0.62	0.87	2.00	2.18
04S-200112-90POP	SAE-04	2.00	1.12	0.37	0.43	1.12	1.25
06S-250125-90POP	SAE-06	2.50	1.25	0.43	0.50	1.25	1.37
08S-300150-90POP	SAE-08	3.00	1.62	0.50	0.62	1.50	1.68
08S-350150-90POP	SAE-08	3.50	1.62	0.50	0.62	1.50	1.62
08S-400150-90POP	SAE-08	4.00	1.62	0.50	0.62	1.50	1.62
08S-450150-90POP	SAE-08	4.50	1.62	0.50	0.62	1.50	1.62
12S-550200-90POP	SAE-12	5.50	2.12	0.62	0.81	2.00	2.18

MATERIAL : C1020 STEEL
MAXIMUM OPERATING PRESSURE : 3000 psi (SAFETY FACTOR = 2)

PISTONS

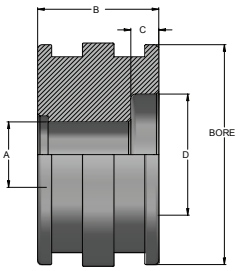

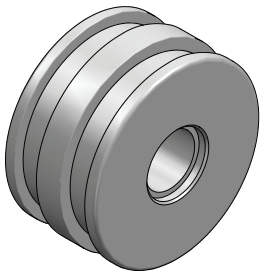

MODEL CODE	DIMENSIONS (IN)					
	BORE	ROD DIAMETER	A	B	C	D
ST-15062-PIP	1.50	1.00	0.62	1.50	-	-
ST-20075-PIP	2.00	1.25	0.75	1.50	-	-
ST-25087-PIP	2.50	1.50	0.87	1.62	0.37	1.62
ST-30087-PIP	3.00	1.50	0.87	1.62	0.37	1.62
ST-35100-PIP	3.50	1.75	1.00	1.62	0.43	1.87
ST-40125-PIP	4.00	2.00	1.25	1.75	0.68	2.62
ST-50150-PIP	5.00	2.50	1.50	2.50	0.62	3.25
ST-60200-PIP	6.00	3.00	2.00	2.50	0.62	3.62

MATERIAL : 65-45-12 DUCTILE CAST IRON
PISTON FOR 5" & 6" BORE COME WITH A WEAR RING GROOVE

GLANDS

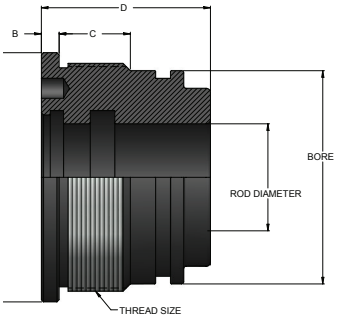

MODEL CODE	DIMENSIONS (IN)						THREAD
	BORE	ROD DIAMETER	A	B	C	D	
ST-15100-GLP	1.50	1.00	2.00	0.25	0.75	2.00	1.700-12 UN
ST-20125-GLP	2.00	1.25	2.50	0.25	0.87	2.25	2.200-12 UN
ST-25150-GLP	2.50	1.50	3.00	0.25	1.00	2.37	2.700-12 UN
ST-30150-GLP	3.00	1.50	3.50	0.25	1.00	2.37	3.200-12 UN
ST-35175-GLP	3.50	1.75	4.00	0.25	1.00	2.37	3.700-12 UN
ST-40200-GLP	4.00	2.00	4.50	0.25	1.00	2.37	4.200-12 UN
ST-50250-GLP	5.00	2.50	5.50	0.31	1.37	3.00	5.200-12 UN
ST-60300-GLP	6.00	3.00	6.75	0.50	1.56	3.50	6.250-12 UN

MATERIAL : 65-45-12 DUCTILE CAST IRON
GLAND FOR 5" & 6" BORE COMES WITH A WEAR RING GROOVE

ROD BUSHINGS

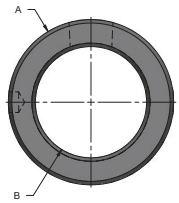

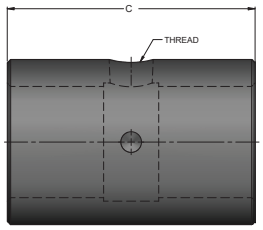

MODEL CODE	DIMENSIONS (IN)			THREAD	MAXIMUM LOAD PUSH / PULL (LBS)
	A	B	C		
BU-075200-BUP	1.25	0.76	2.00	1/8 NPT	5300
BU-100225-BUP	1.50	1.01	2.25	1/8 NPT	21200
BU-125225-BUP	2.00	1.26	2.25	1/8 NPT	29000
BU-150250-BUP	2.25	1.51	2.50	1/8 NPT	37700
BU-200325-BUP*	3.00	*2.01	3.25	1/8 NPT	59000

* COME WITH A SLEEVE TO PASS FROM 2" TO 1 3/4" PIN DIAMETER
MAXIMUM PUSHING / PULLING FORCE ARE BASED ON A SUGGESTED MINIMUM SAFETY FACTOR OF 2
MATERIAL : C1020 STEEL

END CAP BUSHINGS

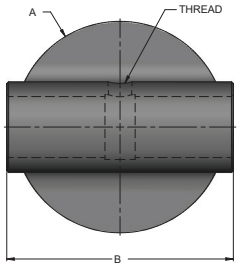

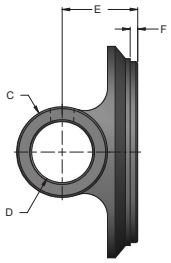

MODEL CODE	DIMENSIONS (IN)							THREAD	MAXIMUM LOAD PUSH / PULL (LBS)
	BORE	A	B	C	D	E	F		
BU-15075-CAP	1.50	2.00	2.25	1.25	0.76	1.12	0.12	1/8 NPT	5300
BU-20100-CAP	2.00	2.50	2.75	1.50	1.01	1.25	0.12	1/8 NPT	9500
BU-25100-CAP	2.50	3.00	3.25	1.50	1.01	1.25	0.12	1/8 NPT	14700
BU-30100-CAP	3.00	3.50	3.75	1.50	1.01	1.25	0.12	1/8 NPT	21200
BU-35125-CAP	3.50	4.00	4.25	2.00	1.26	1.50	0.12	1/8 NPT	29000
BU-40150-CAP	4.00	4.50	4.75	2.25	1.51	1.62	0.12	1/8 NPT	37700
BU-50200-CAP*	5.00	5.50	5.75	3.00	2.01	2.25	0.25	1/8 NPT	59000

* COME WITH A SLEEVE TO PASS FROM 2" TO 1 3/4" PIN DIAMETER
MAXIMUM PUSHING / PULLING FORCE ARE BASED ON A SUGGESTED MINIMUM SAFETY FACTOR OF 2
MATERIAL : C1045 CAST STEEL

END CAP CLEVIS

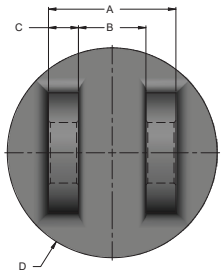

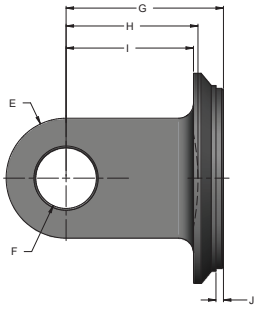

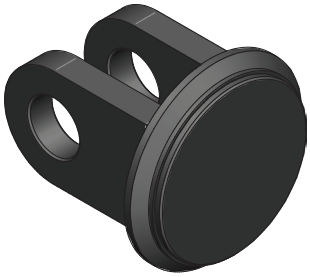

MODEL CODE	DIMENSIONS (IN)											MAXIMUM LOAD PUSH / PULL (LBS)
	BORE	A	B	C	D	E	F	G	H	I	J	
CL-15075-CAP	1.50	1.62	0.87	0.37	2.00	1.50	0.76	1.87	-	1.37	0.12	5300
CL-20100-CAP	2.00	2.12	1.12	0.50	2.50	2.00	1.01	2.62	-	2.12	0.12	9500
CL-25100-CAP	2.50	2.12	1.12	0.50	3.00	2.00	1.01	2.62	-	2.12	0.12	14750
CL-30100-CAP	3.00	2.12	1.12	0.50	3.50	2.00	1.01	2.62	-	2.12	0.12	22500
CL-35100-CAP	3.50	2.37	1.12	0.62	4.00	2.00	1.01	2.62	2.12	2.00	0.12	28100
CL-40100-CAP	4.00	2.37	1.12	0.62	4.50	2.00	1.01	2.50	2.00	1.75	0.12	28100
CL-50150-CAP	5.00	3.12	1.62	0.75	5.50	3.00	1.51	3.12	-	2.25	0.25	50600

MATERIAL : C1045 CAST STEEL
MAXIMUM PUSHING / PULLING FORCE ARE BASED ON A SUGGESTED MINIMUM SAFETY FACTOR OF 2

PINS

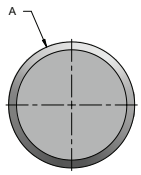

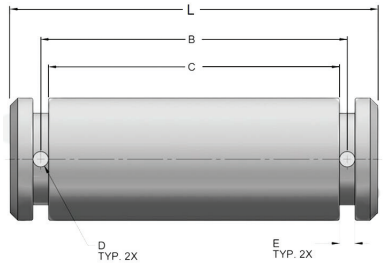

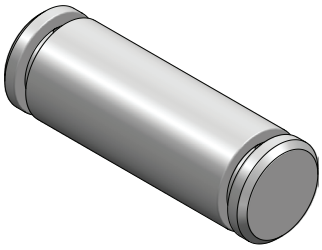

MODEL CODE	DIMENSIONS (IN)					MAXIMUM LOAD PUSH / PULL (LBS)	FOR MODELS
	A	B	C	D & E	L		
075175-PNP	0.750	1.87	1.75	0.12	2.38	15700	CL15, TCL15 CAP
075212-PNP	0.750	2.25	2.12	0.12	2.62	15700	TCL15 FRONT CLEVIS
100237-PNP	1.000	2.50	2.37	0.12	3.00	28100	CL20, CL25, CL30
100262-PNP	1.000	2.75	2.62	0.12	3.25	28100	CL35, CL40
100275-PNP	1.000	2.87	2.75	0.12	3.28	28100	TR2.5, TR3-20/25/30
100287-PNP	1.000	3.00	2.87	0.12	3.63	28100	TCL, TR3-35/40
125350-PNP	1.250	3.62	3.50	0.12	4.12	50500	TRxx-xx16-ASAE, TR3-50
150337-PNP	1.500	3.56	3.37	0.18	4.12	63100	CL50

MATERIAL : C1045 STEEL ZINC PLATED
MAXIMUM PUSHING / PULLING FORCE ARE BASED ON A SUGGESTED MINIMUM SAFETY FACTOR OF 2

BU & CL SERIES

MODEL CODE	DESCRIPTION
SK-BU-CL151000	1 1/2” BORE & 1” ROD
SK-BU-CL201250	2” BORE & 1 1/4” ROD
SK-BU-CL251500	2 1/2” BORE & 1 1/2” ROD
SK-BU-CL301500	3” BORE & 1 1/2” ROD
SK-BU-CL351750	3 1/2” BORE & 1 3/4” ROD
SK-BU-CL402000	4” BORE & 2” ROD
SK-BU-CL502500	5” BORE & 2 1/2” ROD

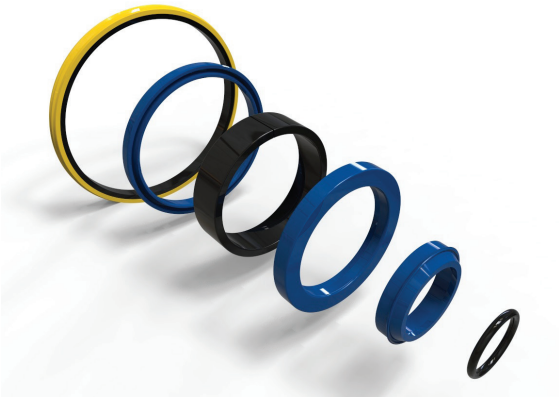

TR2.5 SERIES

MODEL CODE	DESCRIPTION
SK-TR3-201125	2” BORE & 1 1/8” ROD
SK-TR3-251250	2 1/2” BORE & 1 1/4” ROD
SK-TR3-301250	3” BORE & 1 1/4” ROD
SK-TR3-301500	3” BORE & 1 1/2” ROD
SK-TR3-351250	3 1/2” BORE & 1 1/4” ROD
SK-TR3-351500	3 1/2” BORE & 1 1/2” ROD
SK-TR3-401500	4” BORE & 1 1/2” ROD
SK-TR3-401750	4” BORE & 1 3/4” ROD
SK-TR3-402000	4” BORE & 2” ROD
SK-TR3-502000	5” BORE & 2” ROD

TR3 SERIES

MODEL CODE	DESCRIPTION
SK-TR3-201125	2” BORE & 1 1/8” ROD
SK-TR3-251250	2 1/2” BORE & 1 1/4” ROD
SK-TR3-301250	3” BORE & 1 1/4” ROD
SK-TR3-301500	3” BORE & 1 1/2” ROD
SK-TR3-351250	3 1/2” BORE & 1 1/4” ROD
SK-TR3-351500	3 1/2” BORE & 1 1/2” ROD
SK-TR3-401500	4” BORE & 1 1/2” ROD
SK-TR3-401750	4” BORE & 1 3/4” ROD
SK-TR3-402000	4” BORE & 2” ROD
SK-TR3-502000	5” BORE & 2” ROD

TCL SERIES

MODEL CODE	DESCRIPTION
SK-TCL-151000	1 1/2” BORE & 1” ROD
SK-TCL-201125	2” BORE & 1 1/8” ROD
SK-TCL-251250	2 1/2” BORE & 1 1/4” ROD
SK-TCL-301500	3” BORE & 1 1/2” ROD
SK-TCL-351750	3 1/2” BORE & 1 3/4” ROD
SK-TCL-402000	4” BORE & 2” ROD

WT3 SERIES

MODEL CODE	DESCRIPTION
SK-WT3-151000	1 1/2” BORE & 1” ROD
SK-WT3-201250	2” BORE & 1 1/4” ROD
SK-WT3-251375	2 1/2” BORE & 1 3/8” ROD
SK-WT3-301500	3” BORE & 1 1/2” ROD
SK-WT3-351750	3 1/2” BORE & 1 3/4” ROD
SK-WT3-402000	4” BORE & 2” ROD

LOW SPEED HIGH TORQUE MOTORS OVERVIEW

THE HYDRAULIC MOTORS HAVE AN ADVANTAGE OF SMALL VOLUME, HIGH EFFICIENCY, LOW NOISE, ETC. AND CAN BE USED IN A WIDE FIELD OF APPLICATION SUCH AS: CONSTRUCTION, AGRICULTURAL, PLASTIC, MINING, MATERIAL LIFTING, FORESTRY, LAWN AND TURF, MACHINE TOOLS AND STATIONARY, MARINE, ETC.

BMM
UP TO 1950 RPM
UP TO 407 LB-IN

BMM IS A MINI-MOTOR WITH HIGH SPEED CAPABILITIES.

P.29

BM1
UP TO 879 RPM
UP TO 3845 LB-IN

BM1 IS A SMALL VOLUME, SPOOL VALVE TYPE MOTOR, WITH OPTIONAL SIDE LOAD BEARING DESIGN.
AVAILABLE IN H (EATON) AND S (DANFOSS) PORT CONFIGURATION.
HIGH PRESSURE SHAFT SEAL UP TO 2900 PSI AVAILABLE.

P.30

BM2 / BM2W
UP TO 755 RPM
UP TO 5613 LB-IN

BM2 IS A MEDIUM VOLUME, SPOOL VALVE TYPE MOTOR, WITH OPTIONAL SIDE LOAD BEARING DESIGN. AVAILABLE IN H (EATON) AND S (DANFOSS) PORT CONFIGURATION. HIGH PRESSURE SHAFT SEAL UP TO 2900 PSI AVAILABLE.

BM2W WHEEL MOTOR IS A RECESSED MOUNTING FLANGE, WITH RADIAL BEARING DESIGN, WHICH CAN BEAR A GREATER LOAD. HIGH PRESSURE SHAFT SEAL UP TO 2900 PSI AVAILABLE.

P.32

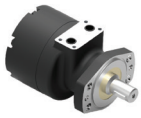

BME
UP TO 336 RPM
UP TO 9824 LB-IN

BME MOTOR HAS ADVANCED GEROLER GEAR SET DESIGN,THEY ARE SUITED FOR HIGH PRESSURE HIGH EFFICIENCY,LOW SPEED APPLICATIONS.IT CAN KEEP HIGH VOLUME EFFICIENCY,LONG WORKING LIFE. HIGH PRESSURE SHAFT SEAL UP TO 2900 PSI AVAILABLE.

P.34

BM5 / BM5S
UP TO 799 RPM
UP TO 6370 LB-IN

BM5 IS A LARGE VOLUME, DISC VALVE, HIGH PRESSURE MOTOR, WITH RADIAL BALL-BEARINGS DESIGN AND CAN BEAR GREATER LOAD. HIGH PRESSURE SHAFT SEAL UP TO 2900 PSI AVAILABLE.

BM5S BEARINGLESS MOTOR IS A SHORT MOTOR DESIGN WITHOUT BEARINGS, FOR GEARBOX ASSEMBLY APPLICATIONS.

P.36

BMT
UP TO 12958 LB-IN

BMT IS OUR LARGEST VOLUME DISC VALVE HIGH PRESSURE MOTOR WITH RADIAL BALL-BEARINGS DESIGN WHICH CAN BEAR GREATER LOAD AND IS SHORTER THAN OUR **BM6**.

P.38

BM6
UP TO 775 RPM
UP TO 3852
LB-IN

BM6 IS A LARGE VOLUME, DISC VALVE, HIGH PRESSURE MOTOR, WITH RADIAL BALL-BEARINGS DESIGN AND CAN BEAR GREATER LOAD, AND HAS HIGHER TORQUE CAPABILITIES THAN OUR **BM5**.

P.39

BMV
UP TO 17813 LB-IN

BMV IS A DISC VALVE, HIGH PRESSURE MOTOR, WITH RADIAL BALL-BEARINGS DESIGN AND EFFICIENT PERFORMANCE WHICH CAN BEAR GREATER LOAD THAN BMT. ITS FIGURATION IS BIGGER THAN **BMT**.

P.40

LOW SPEED HIGH TORQUE MOTORS - BMM SERIE

BMM SERIES MOTOR IS A MINI-MOTOR WITH HIGH SPEED, VERY COMPACT DESIGN, SPOOL VALVE, ECONOMICAL TYPE MOTOR.

CHARACTERISTIC FEATURES

- COMPACT DESIGN OF SPOOL AND GEAR SET, WHICH PROVIDE MINI VOLUME, HIGH POWER DENSITY AND LOW WEIGHT
- CREDIBLE DESIGN FOR SHAFT SEAL, WHICH CAN BEAR HIGH PRESSURE AND BE USED IN PARALLEL OR IN SERIES
- DIRECTION OF SHAFT ROTATION AND SPEED CAN BE CONTROLLED EASILY AND SMOOTHLY

DISPLACEMENT IN³ (CM³) / REV.		0.5 (8.2)	0.79 (12.9)	1.21 (19.9)	1.93 (31.6)	3.0 (50.3)
FLOW (GPM)	CONT.	4.2	5.2	5.2	5.2	5.2
	INT.	5.2	6.6	6.6	6.6	6.6
SPEED (RPM)	CONT.	1950	1550	1000	630	400
	INT.	2450	1940	1250	800	500
PRESSURE (PSI)	CONT.	1450	1450	1450	1450	1015
	INT.	2030	2030	2030	2030	2030
TORQUE (LB-IN)	CONT.	97	141	221	354	407
	INT.	132	203	309	504	778
LENGTH (IN)	L1	4.09	4.17	4.29	4.45	4.80
	L2	4.13	4.21	4.33	4.53	4.84
	L3	0.14	0.22	0.34	0.53	0.85

OTHER SHAFTS & MOUNTINGS AVAILABLE UPON REQUEST

SIDE PORT

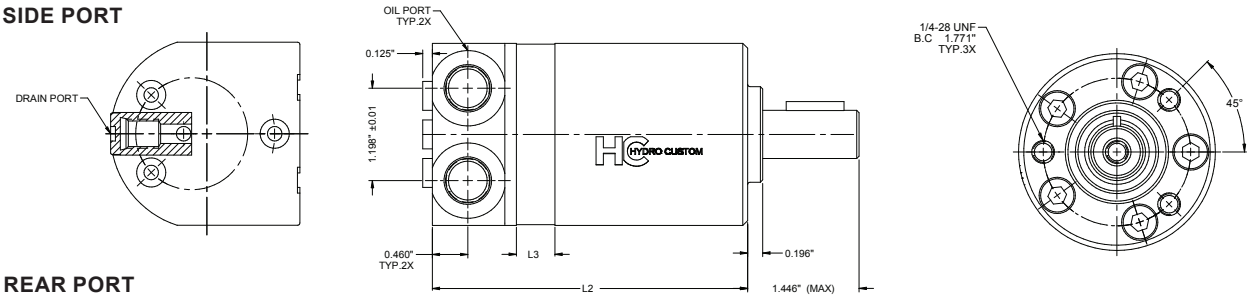

REAR PORT

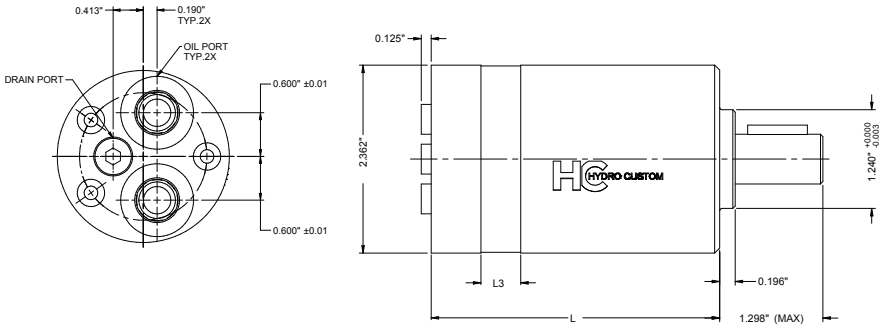

MODEL CODES

PORT CONFIGURATION	0.5 (8.2)	0.79 (12.9)	1.21 (19.9)	1.93 (31.6)	3.0 (50)
SIDE PORT	301-0050	301-0051	301-0052	301-0053	301-0055
REAR PORT	301-0060	301-0061	301-0062	301-0063	301-0065

LOW SPEED HIGH TORQUE MOTORS - BM1 SERIE

BM1 SERIES MOTOR IS A SMALL VOLUME, SPOOL VALVE GEROLOR GEAR SET, ECONOMICAL TYPE MOTOR

CHARACTERISTIC FEATURES

- COMPACT DESIGN OF SPOOL AND GEAR SET, WHICH PROVIDE SMALL VOLUME, HIGH POWER AND LOW WEIGHT
- DIRECTION OF SHAFT ROTATION AND SPEED CAN BE CONTROLLED EASILY AND SMOOTHLY
- BEST COMBINATION OF EFFICIENCY AND ECONOMY IN MEDIUM LOAD APPLICATIONS
- STANDARD SHAFT SEALS RATED AT 1900 PSI
- NEW, ON MANY SERIES, HIGH PRESSURE SHAFT SEALS UP TO 2900 PSI, AVAILABLE UPON REQUEST

MAIN SPECIFICATIONS

DISPLACEMENT IN³ (CM³) / REV.		3.0 (50)	4.8 (80)	6.1 (100)	7.6 (125)	9.7 (160)	12.2 (200)	15.2 (250)	19.2 (315)	24.4 (400)
FLOW (GPM)	CONT.	12	12	15	15	15	15	15	15	15
	INT.	14.5	14.5	20	20	20	20	20	20	20
SPEED (RPM)	CONT.	716	750	550	450	360	280	220	189	140
	INT.	955	900	673	560	430	350	270	236	180
PRESSURE (PSI)	CONT.	2030	2030	2030	2030	2030	2030	1595	1305	1015
	INT.	2537	2537	2537	2537	2537	2537	2030	2030	1522
TORQUE (LB-IN)	CONT.	734	1140	1423	1812	2166	2519	3182	3589	3845
	INT.	955	1503	1874	2343	3014	3448	4022	4464	4694
	PEAK	1014	1630	1990	2681	3441	3967	4113	4885	4922
LENGTH (IN)	L	0.35	0.57	0.70	0.91	1.14	1.46	1.81	2.24	2.84
	L1	5.63	5.81	5.95	6.14	6.38	6.69	7.07	7.50	8.07
	L2	5.83	6	6.14	6.34	6.58	6.89	7.26	7.70	8.27

NOTES
1. CONTINUOUS DATA: THE MAX. VALUE OF OPERATING MOTOR CONTINUOUSLY.
2. INTERMITTENT DATA: THE MAX. VALUE OF OPERATING MOTOR IS 10 % PER MINUTE.
3. A SIMULTANEOUS MAX. RPM AND MAX. PRESSURE IS NOT RECOMMENDED.
4. OPTIMUM OPERATING SITUATION SHOULD BE AT THE 1/3~2/3 OF THE CONTINUOUS OPERATION.

MODEL CODES

TYPE H PORT CONFIGURATION - SIDE LOAD BEARING OPTION

FLANGE	SHAFT	PORT SIZE	3.0 (50)	4.8 (80)	6.1 (100)	7.6 (125)	9.7 (160)	12.2 (200)	15.2 (250)	19.2 (315)	24.4 (400)
2 BOLT	1" STRAIGHT	SAE-10	316-0400H	316-0402H	316-0403H	316-0409H	316-0404H	316-0405H	316-0406H	316-0408H	316-0407H
		1/2 NPT	316-0390H	316-0392H	316-0393H	316-0399H	316-0394H	316-0395H	316-0396H	316-0398H	316-0397H
	1"-6T SPLINE	SAE-10	316-0800H	316-0802H	316-0803H	316-0809H	316-0804H	316-0805H	316-0806H	316-0808H	316-0807H
		1/2 NPT	316-0820H	316-0822H	316-0823H	316-0829H	316-0824H	316-0825H	316-0826H	316-0828H	316-0827H
4 BOLT	1" STRAIGHT	SAE-10	316-0500H	316-0502H	316-0503H	316-0509H	316-0504H	316-0505H	316-0506H	316-0508H	316-0507H
		1/2 NPT	316-0420H	316-0422H	316-0423H	316-0429H	316-0424H	316-0425H	316-0426H	316-0428H	316-0427H
	1"-6T SPLINE	SAE-10	316-0900H	316-0902H	316-0903H	316-0909H	316-0904H	316-0905H	316-0906H	316-0908H	316-0907H
		1/2 NPT	316-0920H	316-0922H	316-0923H	316-0929H	316-0924H	316-0925H	316-0926H	316-0928H	316-0927H

TYPE S PORT CONFIGURATION

FLANGE	SHAFT	PORT SIZE	3.0 (50)	4.8 (80)	6.1 (100)	7.6 (125)	9.7 (160)	12.2 (200)	15.2 (250)	19.2 (315)	24.4 (400)
2 BOLT	1" STRAIGHT	SAE-10	313-0400	313-0402	313-0403	313-0409	313-0404	313-0405	313-0406	313-0408	313-0407
		1/2 NPT	313-0390	313-0392	313-0393	313-0399	313-0394	313-0395	313-0396	313-0398	313-0397
	1"-6T SPLINE	SAE-10	313-0800	313-0802	313-0803	313-0809	313-0804	313-0805	313-0806	313-0808	313-0807
		1/2 NPT	313-1270	313-1272	313-1273	313-1279	313-1274	313-1275	313-1276	313-1278	313-1277
4 BOLT	1" STRAIGHT	SAE-10	313-0500	313-0502	313-0503	313-0509	313-0504	313-0505	313-0506	313-0508	313-0507
		1/2 NPT	313-0420	313-0422	313-0423	313-0429	313-0424	313-0425	313-0426	313-0428	313-0427
	1"-6T SPLINE	SAE-10	313-0900	313-0902	313-0903	313-0909	313-0904	313-0905	313-0906	313-0908	313-0907
		1/2 NPT	313-0920	313-0922	313-0923	313-0929	313-0924	313-0925	313-0926	313-0928	313-0927
4 BOLT + BEARING	1" STRAIGHT	SAE-10	317-0250	317-0252	317-0253	317-0259	317-0254	317-0255	317-0256	317-0258	317-0257

DIMENSIONS

H TYPE

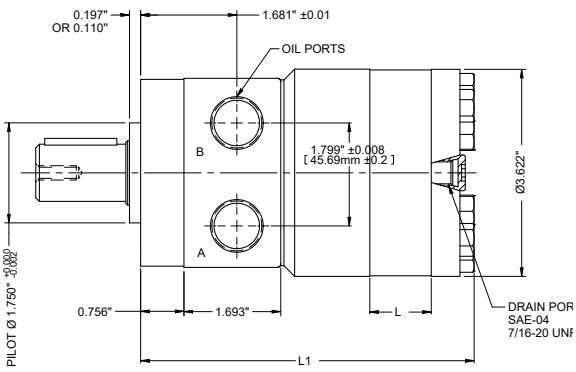

S TYPE

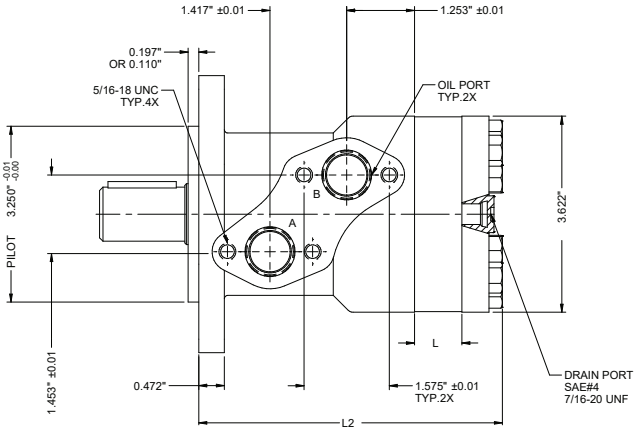

4 BOLT

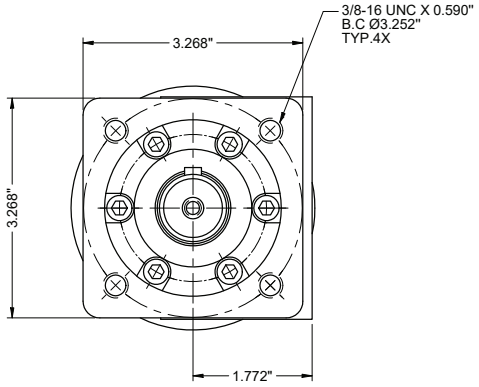

SQUARE FLANGE
4X 3/8-16 UNC BOLT ON Ø3.25”

2 BOLT

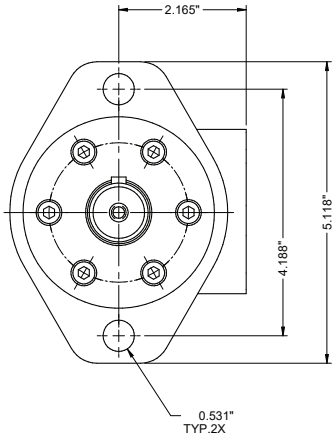

2 BOLTS FLANGE, Ø0.531’’X2
BOLT CENTER SPACE 4.188’’
PILOT Ø3.250’’ X 0.197’’’

SHAFTS

1” STRAIGHT KEY

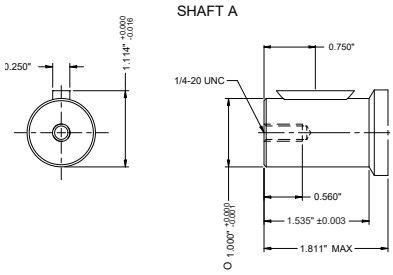

CYLINDER SHAFT : 1’’ X 1.535”
WOODRUFF KEY : 1’’ X 0.250’’
LINK THREAD : 1/4-20 UNC

1”- 6T SPLINE

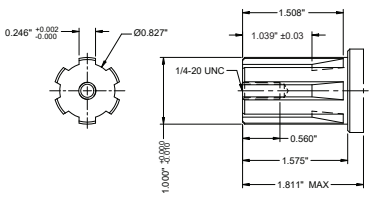

SPLINE SHAFT : 0.996’’ X 1.535”
0.996’’ X 0.846’’ X 0.246’’ 6
TEETH LINK THREAD: 1/4-20 UN C

LOW SPEED HIGH TORQUE MOTORS - BM2 SERIE

BM2 / BM2W SERIES MOTOR IS A MEDIUM, SPOOL VALVE TYPE MOTOR, THAT CAN BEAR HIGHER PRESSURE THAN BM1.

CHARACTERISTIC FEATURES

- IT ADOPTS THE GEROLOR DESIGN
- HAS HIGHER EFFICIENCY THAN OUR BM1 SERIES
- CREDIBLE DESIGN FOR SHAFT SEAL, WHICH CAN BEAR HIGH PRESSURE AND CAN BE USED IN PARALLEL OR IN SERIES APPLICATION
- DIRECTION OF SHAFT SPEED CAN BE CONTROLLED EASILY AND SMOOTHLY
- BEST EFFICIENCY AND ECONOMY IN MEDIUM LOAD APPLICATIONS
- STANDARD SHAFT SEALS RATED AT 1987 PSI
- NEW, ON MANY SERIES, HIGH PRESSURE SHAFT SEALS UP TO 2900 PSI

BM2

BM2W

MAIN SPECIFICATIONS

DISPLACEMENT IN³ (CM³) / REV.		3.0 (50)	4.8 (80)	6.1 (100)	7.6 (125)	9.7 (160)	12.2 (200)	15.2 (250)	19.2 (315)	24.4 (400)	30.4 (500)
FLOW (GPM)	CONT.	10.5	15.8	15.8	15.8	15.8	15.8	15.8	15.8	15.8	15.8
	INT.	13.2	20	20	20	20	20	20	20	20	20
SPEED (RPM)	CONT.	755	750	600	475	375	300	240	190	160	110
	INT.	970	940	750	600	470	375	300	240	200	128
PRESSURE (PSI)	CONT.	2030	2030	2030	2030	2392	1885	1595	1235	1235	1160
	INT.	2537	2900	2900	2900	2900	2900	2900	1667	1667	1305
TORQUE (LB-IN)	CONT.	884	1414	1759	2210	2829	2917	3403	3403	4287	5613
	INT.	1105	1680	2122	2581	3359	3960	4844	4880	5923	6674
LENGTH (IN)	L	0.35	0.57	0.70	0.91	1.14	1.46	1.81	2.24	2.84	3.54
	L1	5.75	5.97	6.09	6.30	6.54	6.85	7.21	7.64	8.23	8.94
	L2	5.95	6.16	6.29	6.50	6.73	7.05	7.40	7.84	8.43	9.13
	L3	6.18	6.42	6.54	6.73	6.99	7.28	7.64	8.07	8.66	9.37

NOTES
1. CONTINUOUS DATA: THE MAX. VALUE OF OPERATING MOTOR CONTINUOUSLY.
2. INTERMITTENT DATA: THE MAX. VALUE OF OPERATING MOTOR IS 10 % PER MINUTE.
3. A SIMULTANEOUS MAX. RPM AND MAX. PRESSURE IS NOT RECOMMENDED.
4. OPTIMUM OPERATING SITUATION SHOULD BE AT THE 1/3~2/3 OF THE CONTINUOUS OPERATION.

MODEL CODES

TYPE H PORT CONFIGURATION - SIDE LOAD BEARING OPTION

FLANGE	SHAFT	PORT SIZE	3.0 (50)	4.8 (80)	6.1 (100)	7.6 (125)	9.7 (160)	12.2 (200)	15.2 (250)	19.2 (315)	24.4 (400)	30.4 (500)
2 BOLT	1" KEY	SAE-10	323-0300H	323-0302H	323-0303H	323-030AH	323-0304H	323-0305H	323-0306H	323-0307H	323-0308H	323-0309H
4 BOLT	1" KEY	SAE-10	323-0400H	323-0402H	323-0403H	323-040AH	323-0404H	323-0405H	323-0406H	323-0407H	323-0408H	323-0409H

TYPE H PORT CONFIGURATION - SIDE LOAD BEARING + HIGH PRESSURE SHAFT SEAL OPTIONS

FLANGE	SHAFT	PORT SIZE	3.0 (50)	4.8 (80)	6.1 (100)	7.6 (125)	9.7 (160)	12.2 (200)	15.2 (250)	19.2 (315)	24.4 (400)	30.4 (500)
2 BOLT	1" KEY	SAE-10	523-0300H	523-0302H	523-0303H	523-030AH	523-0304H	523-0305H	523-0306H	523-0307H	523-0308H	523-0309H
4 BOLT	1" KEY	SAE-10	523-0400H	523-0402H	523-0403H	523-040AH	523-0404H	523-0405H	523-0406H	523-0407H	523-0408H	523-0409H

TYPE S PORT CONFIGURATION

FLANGE	SHAFT	PORT SIZE	3.0 (50)	4.8 (80)	6.1 (100)	7.6 (125)	9.7 (160)	12.2 (200)	15.2 (250)	19.2 (315)	24.4 (400)	30.4 (500)
2 BOLT	1" KEY	SAE-10	322-0300	322-0302	322-0303	322-030A	322-0304	322-0305	322-0306	322-0307	322-0308	322-0309
		1/2 NPT	322-0180	322-0182	322-0183	322-018A	322-0184	322-0185	322-0186	322-0187	322-0188	322-0189
4 BOLT	1" KEY	SAE-10	322-0250	322-0252	322-0253	322-025A	322-0254	322-0255	322-0256	322-0257	322-0258	322-0259
		1/2 NPT	322-0390	322-0392	322-0393	322-039A	322-0394	322-0395	322-0396	322-0397	322-0398	322-0399

SIDE LOAD BEARING AND HIGH PRESSURE SHAFT SEALS OPTION ALSO AVAILABLE

WHEEL MOTOR CONFIGURATION

FLANGE	SHAFT	PORT SIZE	3.0 (50)	4.8 (80)	6.1 (100)	7.6 (125)	9.7 (160)	12.2 (200)	15.2 (250)	19.2 (315)	24.4 (400)	30.4 (500)
WHEEL	1 1/4" TAPER	SAE-10	328-0420F	328-0422F	328-0423F	328-042AF	328-0424F	328-0425F	328-0426F	328-0427F	328-0428F	328-0429F

SIDE LOAD BEARING AND HIGH PRESSURE SHAFT SEALS OPTION ALSO AVAILABLE

DIMENSIONS

H TYPE

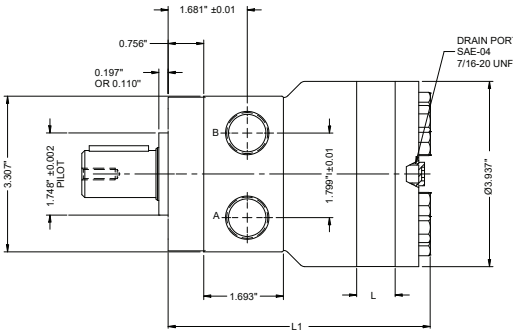

S TYPE

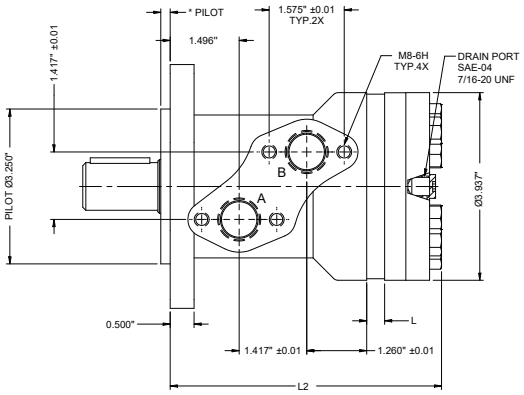

4 BOLT

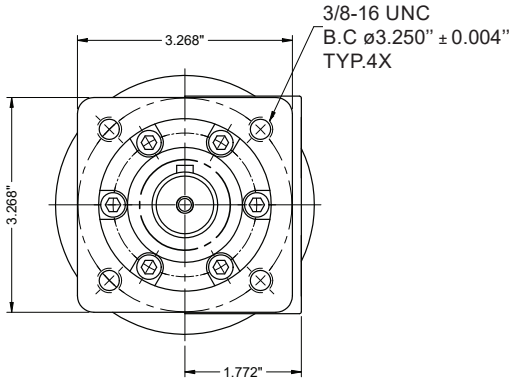

SQUARE FLANGE
4X 3/8-16 UNC BOLT ON ø3.25"

2 BOLT

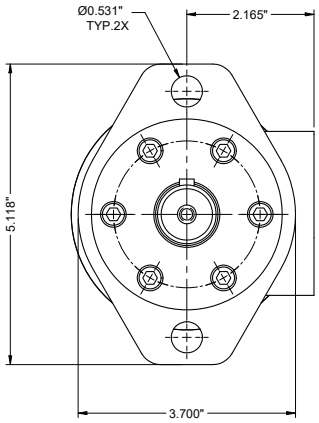

2 BOLTS FLANGE, ø0.531''X2 BOLT CENTER SPACE 4.188''
PILOT ø3.250'' X 0.197''

SHAFTS

1" KEY

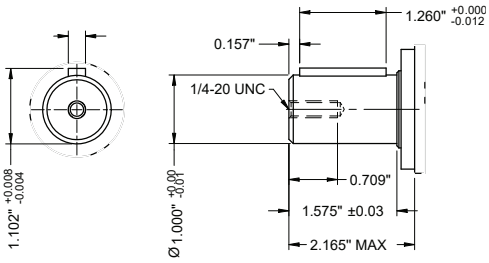

BM2W / 1 1/4" TAPER

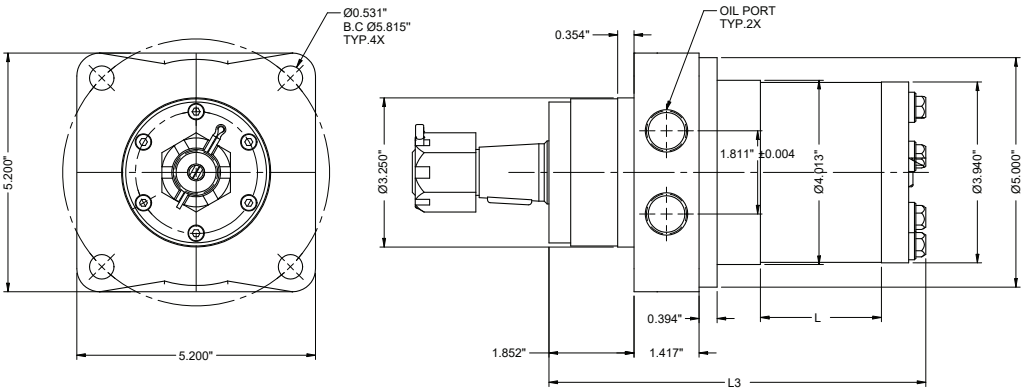

LOW SPEED HIGH TORQUE MOTORS - BME SERIE

BME SERIES MOTOR HAS ADVANCED GEROLER GEAR SET DESIGN,THEY ARE SUITED FOR HIGH PRESSURE HIGH EFFICIENCY, LOW SPEED APPLICATIONS. IT CAN KEEP HIGH VOLUME EFFICIENCY, LONG WORKING LIFE.

CHARACTERISTIC FEATURES

- ADVANCED GEROLER GEAR SET DESIGN, LOW PRESSURE OF START-UP,HIGH EFFICIENCY
- HIGH PRESSURE APPLICATIONS, HIGH TORQUE.HAS NEEDLE BEARINGS DESIGN, IT CAN BEAR HIGH AXIAL AND RADIAL FORCES
- ADVANCE HIGH SPEED DISTRIBUTION FLOW DESIGN, AUTOMATICALLY COMPENSATE IN OPERATING, HIGH VOLUME EFFICIENCY, RUN SMOOTHLY AT LOW SPEED
- STANDARD SHAFT SEALS RATED AT 1900 PSI
- NEW, ON MANY SERIES, HIGH PRESSURE SHAFT SEALS UP TO 2900 PSI

BMEW WHEEL MOUNT

BME 6 HOLES MAGNETO

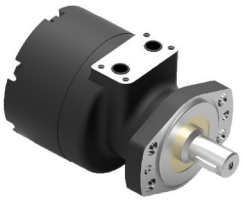

MAIN SPECIFICATIONS

DISPLACEMENT IN³ (CM³) / REV.		7.75 (125)	9.94 (160)	12.20 (200)	15.80 (250)	18.00 (300)	22.70 (375)	28.86 (475)	32.95 (540)	45.46 (750)
FLOW (GPM)	CONT.	11.89	15.85	18.49	19.81	21.13	19.81	19.81	19.81	19.81
	INT.	15.85	19.81	22.45	23.78	25.10	23.78	23.78	23.78	23.78
SPEED (RPM)	CONT.	336	350	330	290	250	200	150	140	100
	INT.	450	440	425	350	315	240	180	170	120
PRESSURE (PSI)	CONT.	2973	2973	2973	2973	2973	2973	2538	2030.5	1523
	INT.	3480	3480	3480	3480	3480	3480	2756	2538	1740
TORQUE (LB-IN)	CONT.	3088	4159	4708	6195	7169	8762	9824	8673	9293
	INT.	3611	4850	5328	6992	8231	10089	10691	10974	10443
LENGTH (IN)	L	6.06	6.22	6.33	6.53	6.69	6.93	185	7.28	8.22
	L1	4.43	4.56	4.69	4.89	5.02	5.29	5.64	5.87	6.66

NOTE: 1. CONTINUOUS DATA: THE MAX. VALUE OF OPERATING MOTOR CONTINUOUSLY.
2. INTERMITTENT DATA: THE MAX. VALUE OF OPERATING MOTOR IN 6 SECONDS PER MINUTE.
3. A SIMULTANEOUS MAX. RPM AND MAX. PRESSURE IS NOT RECOMMENDED.
4. OPTIMUM OPERATING SITUATION SHOULD BE AT THE 1/3~2/3 OF THE CONTINUOUS OPERATING SITUATION.

MODEL CODES

FLANGE	SHAFT	7.75 (125)	9.94 (160)	12.20 (200)	15.80 (250)	18.00 (300)	22.70 (375)	28.86 (475)	32.95 (540)	45.46 (750)
MAGNETO MOUNT	1 1/4" STRAIGHT	392-0020F	392-0021F	392-0022F	392-0023F	392-0024F	392-0026F	392-0027F	392-0028F	392-0029F
	1 1/4" SPLINE	392-2020F	392-2021F	392-2022F	392-2023F	392-2024F	392-2026F	392-2027F	392-2028F	392-2029F
	1" STRAIGHT	392-0050F	392-0051F	392-0052F	392-0053F	392-0054F	392-0056F	392-0057F	392-0058F	392-0059F
	1" SPLINE	392-1000F	392-1001F	392-1002F	392-1003F	392-1004F	392-1006F	392-1007F	392-1008F	392-1009F
WHEEL MOTOR	1 1/4" TAPER	392-3000F	392-3001F	392-3002F	392-3003F	392-3004F	392-3006F	392-3007F	392-3008F	392-3009F
	1 1/4" STRAIGHT	392-3020F	392-3021F	392-3022F	392-3023F	392-3024F	392-3026F	392-3027F	392-3028F	392-3029F
	1 1/4" SPLINE	392-2030F	392-2031F	392-2032F	392-2033F	392-2034F	392-2036F	392-2037F	392-2038F	392-2039F

ALSO AVAILABLE:
- OTHER SHAFT DIMENSIONS
- OTHER MOUNTING FLANGES

DIMENSIONS

MAGNETO - 6 BOLT

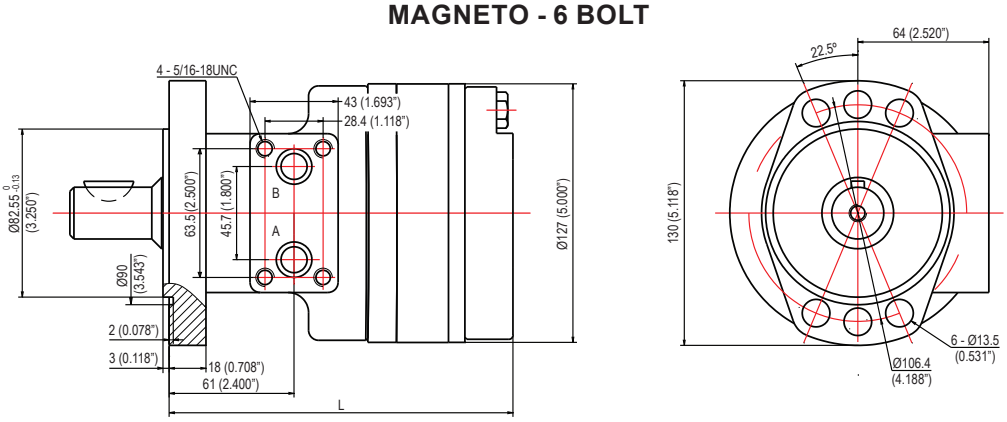

BMEW WHEEL MOUNT

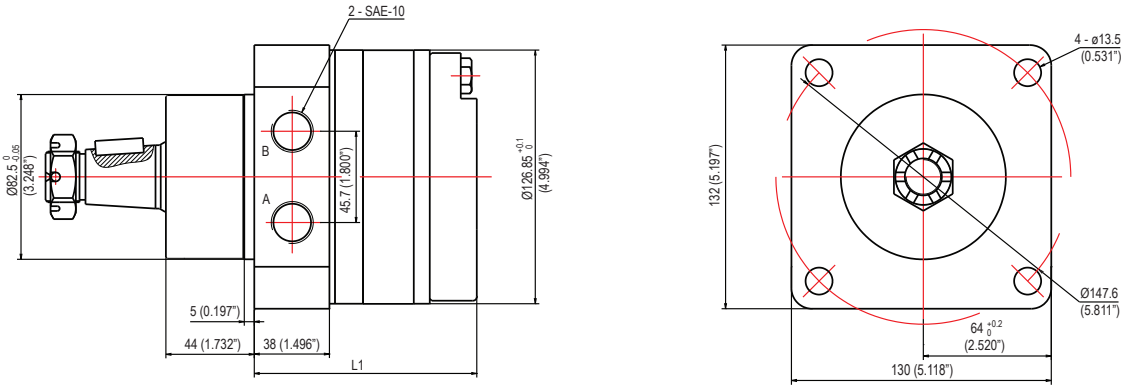

SHAFTS

1 1/4" STRAIGHT KEY

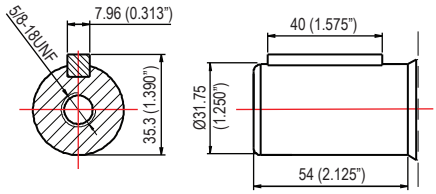

1 1/4"-14T SPLINE

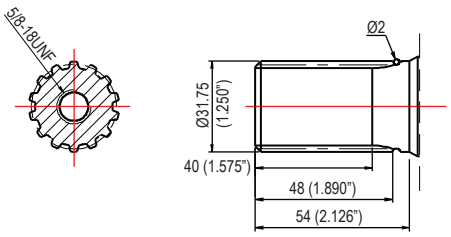

1" STRAIGHT KEY

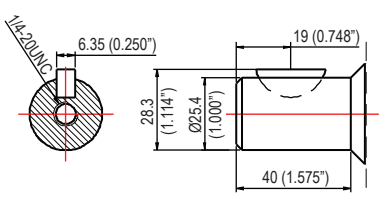

1 1/4" TAPER

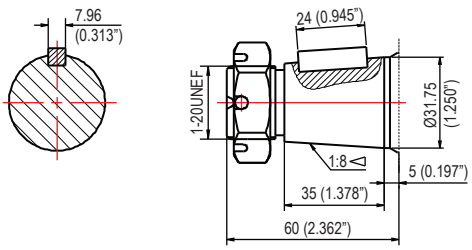

LOW SPEED HIGH TORQUE MOTORS - BM5 SERIE

BM5 IS A LARGE VOLUME, DISC VALVE, HIGH PRESSURE MOTOR WITH RADIAL BEARINGS DESIGN AND CAN BEAR GREATER LOAD.

• HIGH PRESSURE SHAFT SEAL UP TO 2900 PSI AVAILABLE

MAIN SPECIFICATIONS

DISPLACEMENT IN³ *(CM³)* / REV.		4.8 *(80)*	6.1 *(100)*	7.6 *(125)*	9.7 *(160)*	12.2 *(200)*	15.2 *(250)*	18.6 *(305)*	24.4 *(400)*	30.4 *(500)*
FLOW (GPM)	CONT.	20	20	20	20	20	20	20	20	20
	INT.	22	25	25	30	30	30	30	30	30
SPEED (RPM)	CONT.	799	742	576	460	365	294	246	183	148
	INT.	908	924	720	713	577	462	365	287	230
PRESSURE (PSI)	CONT.	2980	3045	3045	3045	3045	2900	2900	2320	1740
	INT.	4350	4350	4350	3770	3770	3770	3480	2465	2030
	PEAK	4350	4350	4350	4350	4350	4350	4350	2900	2465
TORQUE (LB-IN)	CONT.	2033	2564	3182	4058	4791	5658	5967	7337	7470
	INT.	2555	3359	4243	4685	5622	6895	6851	8044	8398
	PEAK	2917	3713	4774	4818	5834	7205	8212	8840	9061
LENGTH (IN)	L	0.59	0.73	0.90	1.14	1.41	1.77	2.20	2.83	3.56
	L3	7.08	7.22	7.40	7.64	7.91	8.27	8.70	9.33	10.25

NOTES 1. CONTINUOUS DATA: THE MAX. VALUE OF OPERATING MOTOR CONTINUOUSLY.
2. INTERMITTENT DATA: THE MAX. VALUE OF OPERATING MOTOR IS 10 % PER MINUTE.
3. A SIMULTANEOUS MAX. RPM AND MAX. PRESSURE IS NOT RECOMMENDED.
4. OPTIMUM OPERATING SITUATION SHOULD BE AT THE 1/3~2/3 OF THE CONTINUOUS OPERATION.

MODEL CODES

FLANGE	SHAFT	4.8 *(80)*	6.1 *(100)*	7.6 *(125)*	9.7 *(160)*	12.2 *(200)*	15.2 *(250)*	18.6 *(305)*	24.4 *(400)*	30.4 *(500)*
SAE-A 4 BOLT	1 1/4" STRAIGHT	351-0571	351-0572	351-0573	351-0574	351-0575	351-0576	351-0577	351-0578	351-0570
	1 1/4" SPLINE	351-2031	351-2032	351-2033	351-2034	351-2035	351-2036	351-2037	351-2038	351-2030
	1" STRAIGHT	351-0581	351-0582	351-0583	351-0584	351-0585	351-0586	351-0587	351-0588	351-0580
	1" SPLINE	351-1301G	351-1302G	351-1303G	351-1304G	351-1305G	351-1306G	351-1307G	351-1308G	351-1300G
MAGNETO MOUNT	1 1/4" STRAIGHT	351-0211	351-0212	351-0213	351-0214	351-0215	351-0216	351-0217	351-0218	351-0210
	1 1/4" SPLINE	351-2111	351-2112	351-2113	351-2114	351-2115	351-2116	351-2117	351-2118	351-2110
WHEEL MOTOR	1 1/4" TAPER	351-3141	351-3142	351-3143	351-3144	351-3145	351-3146	351-3147	351-3148	351-3140

ALSO AVAILABLE:
• OTHER SHAFT DIMENSIONS
• OTHER MOUNTING FLANGES

DIMENSIONS

BM5

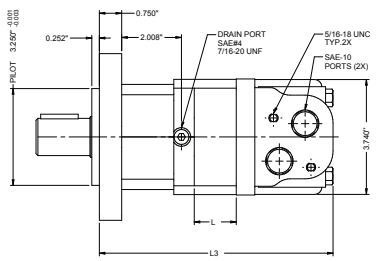

BM5W

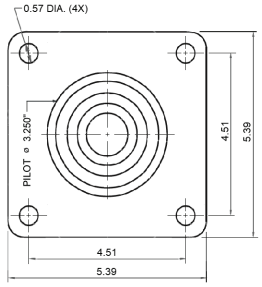

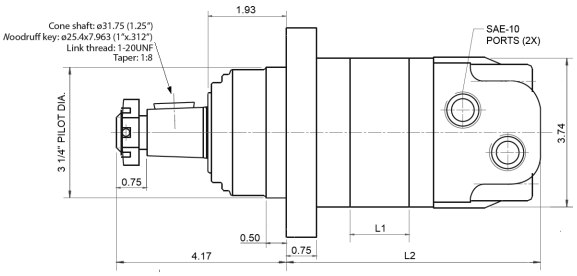

MOUNTING FLANGES

SAE A - 4 BOLT

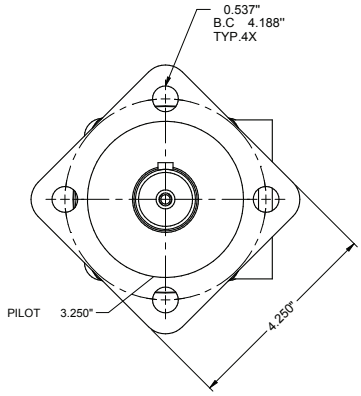

MAGNETO - 6 BOLT

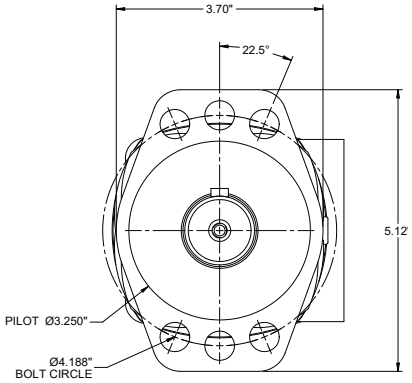

SHAFTS

1 1/4" STRAIGHT KEY

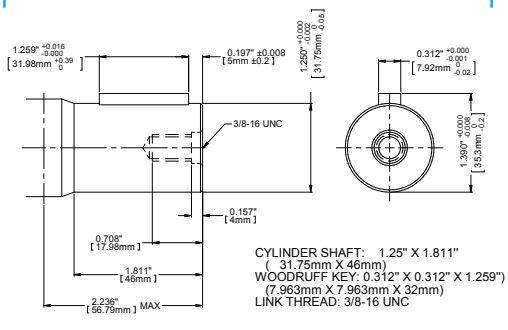

1 1/4"-14T SPLINED

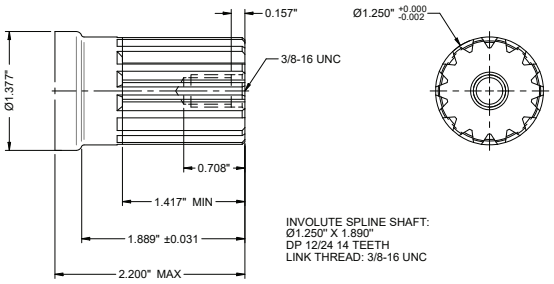

1" STRAIGHT KEY

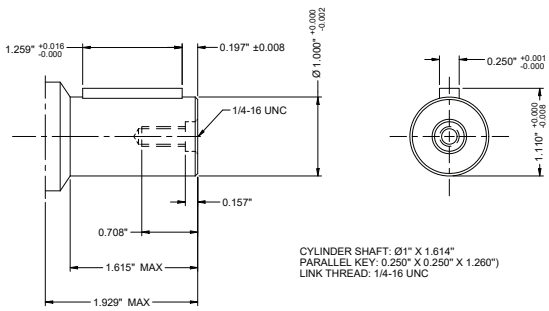

1"-6T SPLINED

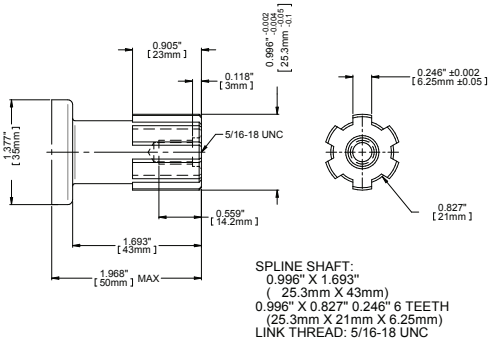

LOW SPEED HIGH TORQUE MOTORS - BMT SERIE

BMT IS A LARGE VOLUME DISC VALVE, HIGH PRESSURE MOTOR, WITH RADIAL BALL-BEARINGS DESIGN, AND CAN BEAR GREATER LOAD.

CHARACTERISTIC FEATURES

- THE MOTOR CAN BE USED IN HIGH PRESSURE AND HIGH TORQUE
- ADVANCED DESIGN IN DISC DISTRIBUTION FLOW, WHICH CAN PROVIDE IMPROVED PERFORMANCE AT LOW SPEED
- THE VALVE CAN AUTOMATICALLY COMPENSATE FOR THE WEAR, SO THE VOLUMETRIC EFFICIENCY IS HIGH
- DOUBLE TAPER ROLLER BEARINGS PERMIT HIGH RADIAL LOADS. THE MOTORS CAN BE USED ON HEAVIER VEHICLES IN TRACTION DRIVE APPLICATIONS

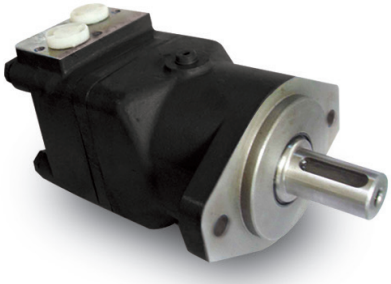

MAIN SPECIFICATIONS

DISPLACEMENT IN³ (CM³) / REV.		15.2 (250)	19.2 (315)	24.3 (400)	30.4 (500)	38.4 (630)	48.7 (800)
FLOW (GPM)	CONT.	33	33	33	33	33	33
	INT.	40	40	40	40	40	40
SPEED (RPM)	CONT.	495	380	302	237	196	154
	INT.	592	458	364	284	233	185
PRESSURE (PSI)	CONT.	2900	2900	2600	2320	2030	1812
	INT.	3480	3480	3045	2610	2320	1885
TORQUE (LB-IN)	CONT.	6435	8515	9691	11020	11665	12958
	INT.	7860	10214	11231	12471	13258	13453
LENGHT (IN)	L	8.37	8.58	8.86	9.17	9.65	10.22

NOTES 1. CONTINUOUS DATA: THE MAX. VALUE OF OPERATING MOTOR CONTINUOUSLY.
2. INTERMITTENT DATA: THE MAX. VALUE OF OPERATING MOTOR IN 6 SECONDS PER MINUTE.
3. A SIMULTANEOUS MAX. RPM AND MAX. PRESSURE IS NOT RECOMMENDED.
4. THE CONVERSION FACTORS IS ON THE PAGE 4, CONSULT IT PLEASE.
5. OPTIMUM OPERATING SITUATION SHOULD BE AT THE 1/3~2/3 OF THE CONTINUOUS OPERATING SITUATION.

MODEL CODES

FLANGE	SHAFT	15.2 (250)	19.2 (315)	24.3 (400)	30.4 (500)	38.4 (630)	48.7 (800)
SAE-C 4 BOLT	1 1/2" STRAIGHT	370-0141	370-0142	370-0143	370-0144	370-0145	370-0146

OTHER MOUNTINGS AND SHAFTS AVAILABLE

DIMENSIONS

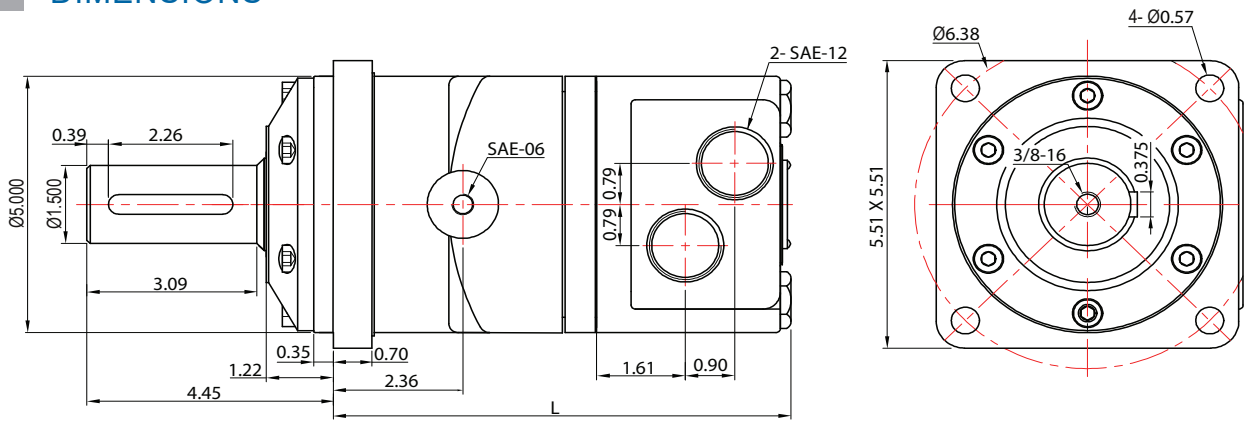

BM6 IS A LARGE VOLUME, DISC VALVE, HIGH PRESSURE MOTOR, WITH RADIAL BALL-BEARINGS DESIGN AND CAN BEAR GREATER LOAD, AND HAS HIGHER TORQUE CAPABILITIES THAN OUR BM5

CHARACTERISTIC FEATURES

- THE MOTOR CAN BE USED IN HIGH PRESSURE AND HIGH TORQUE
- ADVANCED DESIGN IN DISC DISTRIBUTION FLOW,WHICH CAN PROVIDE IMPROVED PERFORMANCE AT LOW SPEED
- THE VALVE CAN AUTOMATICALLY COMPENSATE FOR THE WEAR, SO THE VOLUMETRIC EFFICIENCY IS HIGH
- DOUBLE TAPER ROLLER BEARINGS PERMIT HIGH RADIAL LOADS. THE MOTORS CAN BE USED ON HEAVIER VEHICLES IN TRACTION DRIVE APPLICATIONS

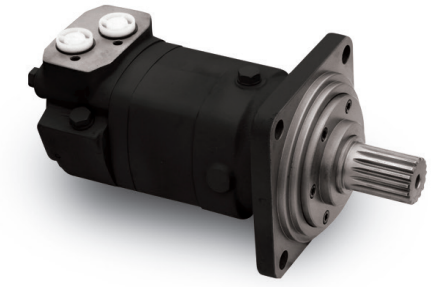

MAIN SPECIFICATIONS

DISPLACEMENT IN³ (CM³) / REV.		11.8 (195)	14.9 (245)	18.9 (310)	24.0 (395)	29.8 (490)	38.1 (625)	48.7 (800)	60.0 (985)
FLOW (GPM)	CONT.	40	40	40	40	40	40	40	40
	INT.	45	55	60	60	60	60	60	60
SPEED (RPM)	CONT.	775	615	485	383	307	241	184	153
	INT.	866	834	698	563	454	355	276	230
PRESSURE (PSI)	CONT.	2975	2975	2975	2975	2450	2030	1740	1740
	INT.	4500	4500	4500	4500	3990	2465	2030	2030
TORQUE (LB-IN)	CONT.	5083	6497	8212	10051	10723	11731	12483	13852
	INT.	7602	10440	11934	14453	16619	12155	14551	16540
LENGHT (IN)	L3	10.15	10.35	10.63	11.02	11.42	12.00	12.83	13.58

NOTES
1. CONTINUOUS DATA: THE MAX. VALUE OF OPERATING MOTOR CONTINUOUSLY.
2. INTERMITTENT DATA: THE MAX. VALUE OF OPERATING MOTOR IN 6 SECONDS PER MINUTE.
3. A SIMULTANEOUS MAX. RPM AND MAX. PRESSURE IS NOT RECOMMENDED.
4. THE CONVERSION FACTORS IS ON THE PAGE 4, CONSULT IT PLEASE.
5. OPTIMUM OPERATING SITUATION SHOULD BE AT THE 1/3~2/3 OF THE CONTINUOUS OPERATING SITUATION.

MODEL CODES

FLANGE	SHAFT	11.8 (195)	14.9 (245)	18.9 (310)	24.00 (395)	29.8 (490)	38.1 (625)	48.7 (800)	60.0 (985)
SAE-C 4 BOLT	1 1/2" STRAIGHT	361-0181	361-0182	361-0183	361-0184	361-0185	361-0186	361-0188	361-0187

OTHER MOUNTINGS AND SHAFTS AVAILABLE

DIMENSIONS

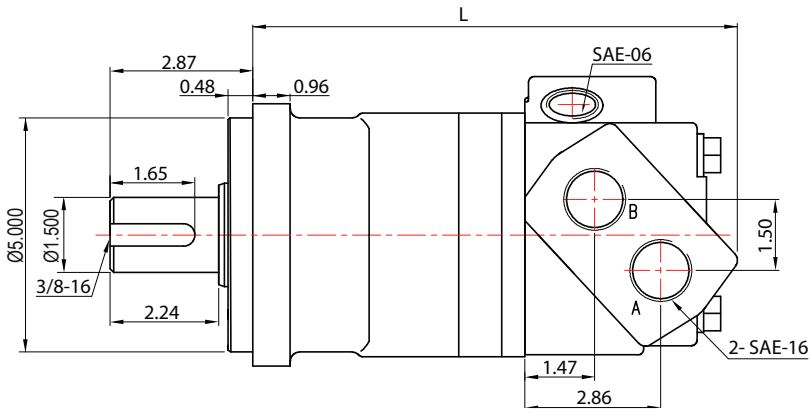

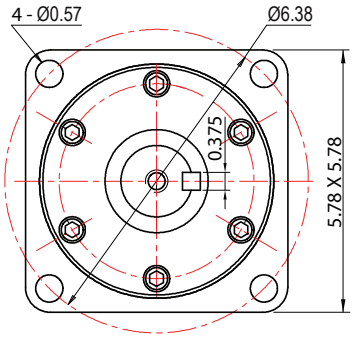

LOW SPEED HIGH TORQUE MOTORS - BMV SERIE

BMV IS A DISC VALVE, HIGH PRESSURE MOTOR, WITH RADIAL BALL-BEARINGS DESIGN AND EFFICIENT PERFORMANCE WHICH CAN BEAR GREATER LOAD THAN BMT. ITS FIGURATION IS BIGGER THAN **BMT**.

CHARACTERISTIC FEATURES

- THE MOTOR CAN BE USED IN HIGH PRESSURE AND HIGH TORQUE
- ADVANCED DESIGN IN DISC DISTRIBUTION FLOW,WHICH CAN PROVIDE IMPROVED PERFORMANCE AT LOW SPEED
- THE VALVE CAN AUTOMATICALLY COMPENSATE FOR THE WEAR, SO THE VOLUMETRIC EFFICIENCY IS HIGH
- DOUBLE TAPER ROLLER BEARINGS PERMIT HIGH RADIAL LOADS. THE MOTORS CAN BE USED ON HEAVIER VEHICLES IN TRACTION DRIVE APPLICATIONS

MAIN SPECIFICATIONS

DISPLACEMENT IN³ (CM³) / REV.		19.2 (315)	24.3 (400)	30.4 (500)	38.4 (630)	48.7 (800)	60.9 (1000)
FLOW (GPM)	CONT.	42	53	53	53	53	53
	INT.	53	63	63	63	63	63
SPEED (RPM)	CONT.	510	500	400	320	250	200
	INT.	630	600	480	380	300	240
PRESSURE (PSI)	CONT.	3045	3045	3045	3045	3045	3045
	INT.	3625	3625	3625	3625	3625	3625
TORQUE (LB-IN)	CONT.	7213	10502	13039	14869	15824	17813
	INT.	9892	12659	15611	17371	17689	20155
LENGHT (IN)	L	8.38	8.66	8.98	9.44	10.02	10.65

NOTES 1. CONTINUOUS DATA: THE MAX. VALUE OF OPERATING MOTOR CONTINUOUSLY.
2. INTERMITTENT DATA: THE MAX. VALUE OF OPERATING MOTOR IN 6 SECONDS PER MINUTE.
3. A SIMULTANEOUS MAX. RPM AND MAX. PRESSURE IS NOT RECOMMENDED.
4. THE CONVERSION FACTORS IS ON THE PAGE 4, CONSULT IT PLEASE.
5. OPTIMUM OPERATING SITUATION SHOULD BE AT THE 1/3~2/3 OF THE CONTINUOUS OPERATING SITUATION.

MODEL CODES

FLANGE	SHAFT	19.2 (315)	24.3 (400)	30.4 (500)	38.4 (630)	48.7 (800)	60.9 (1000)
SAE-C 4 BOLT	2 1/4" STRAIGHT	381-0021	381-0022	381-0023	381-0024	381-0025	381-0026

OTHER MOUNTINGS AND SHAFTS AVAILABLE

DIMENSIONS

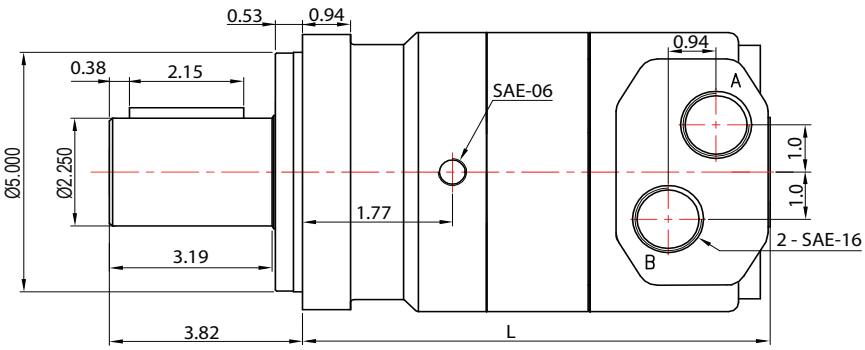

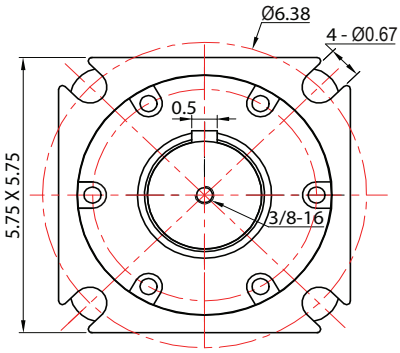

BM2B BRAKE MOTOR

BM2B BRAKE MOTOR IS DESIGNED WITH BRAKE DEVICE, SHUTTLE VALVE, INTERNAL CONTROL OIL LOOP. COMPACT DESIGN FOR SMALL VOLUME AND EASY INSTALLATION.

DISPLACEMENT IN³ (CM³) / REV.	4.8 (80)	6.1 (100)	7.6 (125)	9.7 (160)	12.2 (200)	15.2 (250)	19.2 (315)
RELEASE PRESSURE (PSI)	188-246	188-246	188-246	320-375	320-375	320-375	320-375
BRAKE TORQUE (Nm) (LB-IN)	<=300 <=2655	<=300 <=2655	<=300 <=2655	<=500 <=4425	<=500 <=4425	<=500 <=4425	<=500 <=4425
MAX PSI	2030	2030	2030	2030	2030	1595	1305
MAX GPM	13	13	13	13	13	13	13

BM6B BRAKE MOTOR

BM6B MOTOR IS A BM6 WITH MULTI-DISC BRAKE WHICH RELEASES USING HYDRAULIC PRESSURE. THE MOTOR HAS THE SAME WORK PERFORMANCE AS A REGULAR BM6 WHEN THE BRAKE IS RELEASED.

DISPLACEMENT IN³ (CM³) / REV.	11.8 (195)	14.9 (245)	18.9 (310)	24.0 (395)	29.8 (490)	38.1 (625)
RELEASE PRESSURE (PSI)	362	362	362	362	362	362
BRAKE TORQUE (Nm) (LB-IN)	≤ 800 ≤ 7080	≤ 800 ≤ 7080	≤ 800 ≤ 7080	≤ 800 ≤ 7080	≤ 800 ≤ 7080	≤ 800 ≤ 7080
MAX PSI	2975	2975	2975	2975	2465	2465
MAX GPM	40	40	40	40	40	40

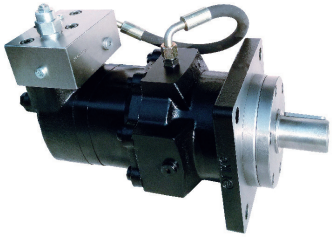

HYDRAULIC BRAKES TO INSTALL ON MOTORS

ZD80 AND ZD100 SERIES HYDRAULIC BRAKES ARE MULTI-DISC BRAKE DESIGN. THEY ARE WIDELY APPLIED IN HEAVY LOAD MACHINES SUCH AS; CRANES, AGRICULTURAL MACHINES, ENVIRONMENTAL SANITATION MACHINES, ETC.

- COMPACT DESIGN
- EXCELLENT PERFORMANCE
- CAN BE INDEPENDENTLY USED WITHOUT MOTORS
- EASY TO INSTALL

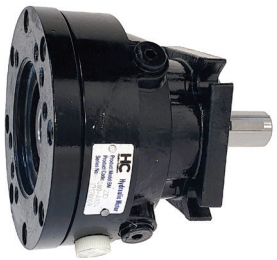

MAIN SPECIFICATION

MODELS	ZD80	ZD100
MIN STATIC TORQUE (LB-IN)	3982	4865
MIN OPENING PRESSURE (PSI	362	
MAX OPENING PRESSURE (PSI)	4350	
MIN OIL QUANTITY FOR BRAKE RELEASING (CC)	7-8	
OIL VOLUME (CC)	50-120	
MAX PRESSURE IN DRAIN SPACE (PSI)	7	

MODEL CODE	FEMALE	MALE	MOUNTING FLANGE
ZD80-A014	1”-6T SPLINE	1”-6T SPLINE	SAE-A 2/4 BOLTS
ZD80-A024		1” KEY	

CROSSOVER RELIEF VALVES

- MADE TO ABSORB PEAK OF PRESSURE
- COMPACT DESIGN
- FITS MANY MANUFACTURERS

MODEL CODE	FITS ON MOTORS	PSI RANGE	PORT SIZE
469-8210	BMM	500-2000	SAE-06
460-2100	BM1/BM2	725-1450	SAE-10
460-2210	BM1/BM2	1000-3000	
465-1210	BM5	1000-3000	

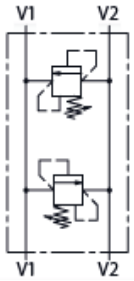

INTEGRATED COUNTERBALANCE VALVES

- MADE TO SMOOTLHY BRAKE ROTATION
- FITS ON BM1 & BM2 MOTORS- INTEGRATE A
- SHUTTLE TO SEND A SIGNAL/OIL

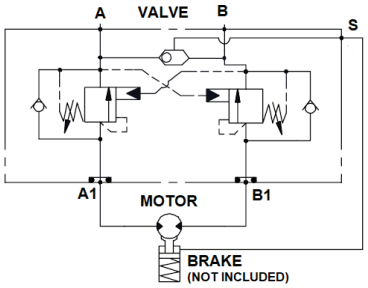

MODEL CODE
ZUB 1281

STEERING COLUMNS

- FITS ON MOST COMMON DANFOSS & CHARLYNN UNITS

MODEL CODE	LENGTH (IN)
651-1579-S	6.0
650-1500-S	8.0
651-1504-S	16.0

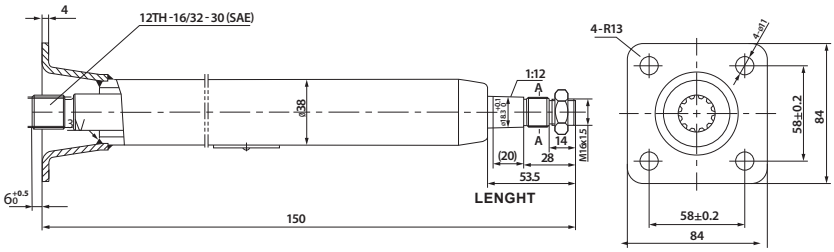

HYDRO CUSTOM™

BAILEY HYDRAULICS™

MOTORS

STEERING UNITS

MODEL CODE

EXAMPLE 060 X XX X X

- 060 → DESIGN
- X → FONCTION
- XX → PORTS & LINK THREAD
- X → DISPLACEMENT
- X → INTEGRATED VALVES MODEL AVAILABLE

FONCTION

1	3	5	7
SCHEMA OPEN CENTER NON-REACTION	SCHEMA CLOSED CENTER NON-REACTION	SCHEMA STATIC SIGNAL LOAD SENSING TYPE	SCHEMA DYNAMIC SIGNAL LOAD SENSING TYPE

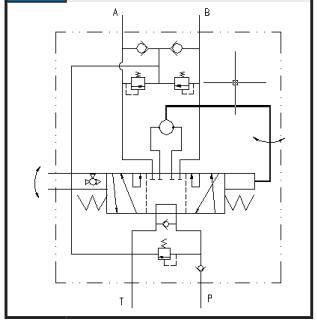

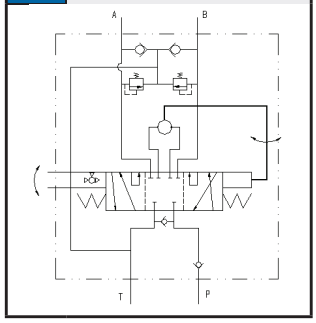

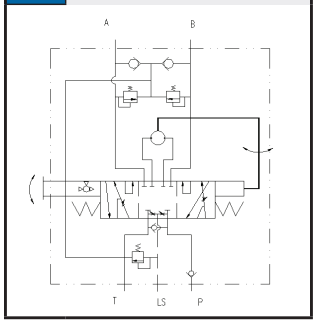

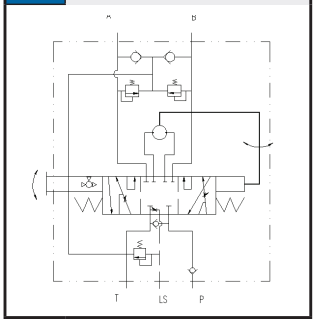

PORT & LINK THREADS

DESIGN	PORT (M)	LINKED THREAD ON PORT SURFACE (V)	COLUMN MOUNTING THREAD	LOAD SENSING PORTS (LS)
33	SAE-08	3/8-24UNF	3/8-16UNC	SAE-04
38	SAE-06	M12X1.75		
44	SAE-08	M12X1.75		

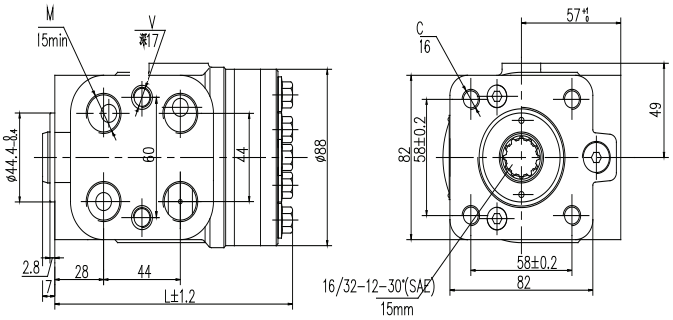

INTEGRATED VALVES MODEL AVAILABLE

VARIETY OF RELIEF, SHOCK, ANTI-CAVITATION & CHECK VALVES AVAILABLE UPON DEMAND.

DISPLACEMENTS

DESIGN	DISPLACEMENT IN³ *(CM³)* / REV.	MAX GPM	MAX PSI	MAX PSI ON T PORT	DIM "L" (MM)
0	3.0 *(50)*	1.3	2538	362	128.5
A	3.8 *(63)*	1.7			130.5
1	4.8 *(80)*	2.1			130.5
2	6.1 *(100)*	2.6			13
3	7.6 *(125)*	3.3			136
4	9.7 *(160)*	4.2			141
5	12.2 *(200)*	5.3			146
6	15.2 *(250)*	6.6			152
7	19.2 *(315)*	8.3			162
8	24.4 *(400)*	10.5			172
9	30.4 *(500)*	13.2			184

1.5ME SERIE

- BI-DIRECTIONAL
- SAE-AA 2 BOLT MOUNTING FLANGE
- 1/2 PARALLEL SHAFT
- SAE 04 DRAIN PORT

*** NEW HIGH PRESSURE SHAFT SEAL AVAILABLE CAN GO UP TO 450 PSI COMPARE TO 43 PSI WITHOUT**

MODEL CODE	DISPLACEMENT IN³ (CM³) / REV.	MAX PSI	RPM MIN	RPM MAX	PORT SIZE IN & OUT
610910328	0.17 *(2.8)*	3625	700	4500	SAE-08
610911088	0.21 *(3.5)*	3625		4500	
610910348	0.25 *(4.1)*	3625		4000	
610911098	0.32 *(5.2)*	3335		4000	
610910368	0.38 *(6.2)*	3335	600	3600	
610911108	0.46 *(7.6)*	2900		3300	SAE-10
610910388	0.57 *(9.3)*	2610		3000	
610910398	0.67 *(11)*	2465		3000	

2ME SERIE

- BI-DIRECTIONAL
- SAE-A 2 BOLT MOUNTING FLANGE
- 5/8" PARALLEL SHAFT
- SAE 04 DRAIN PORT

*** NEW HIGH PRESSURE SHAFT SEAL AVAILABLE CAN GO UP TO 450 PSI COMPARE TO 43 PSI WITHOUT**

MODEL CODE	DISPLACEMENT IN³ (CM³) / REV.	MAX PSI	RPM MIN	RPM MAX	PORT SIZE IN & OUT
612095948	0.40 *(6.5)*	3600	600	4000	SAE-10
612081668	0.50 *(8.3)*		500	3600	
612083618	0.68 *(11.3)*			3500	
612084388	0.84 *(13.8)*			3400	
612084398	1.01 *(16)*		450	3200	
612084408	1.15 *(19)*	3140			SAE-12
612084418	1.37 *(22.5)*	2900		3000	
612084428	1.58 *(26)*	2600		2850	

ALSO AVAILABLE

- OTHER SHAFT DIMENSIONS
- OUTRIGGER BEARING TO ACCEPT SIDE LOAD
- REAR PORT COVER
- INTERNAL DRAIN

2MGE CAST IRON SERIE

- BI-DIRECTIONAL
- SAE-A 2 BOLT MOUNTING FLANGE
- 5/8" PARALLEL SHAFT
- SAE 04 DRAIN PORT

*** NEW HIGH PRESSURE SHAFT SEAL AVAILABLE CAN GO UP TO 450 PSI COMPARE TO 43 PSI WITHOUT**

MODEL CODE	DISPLACEMENT IN³ (CM³) / REV.	MAX PSI	RPM MIN	RPM MAX	PORT SIZE IN & OUT
614670872	1.01 *(16)*	3600	450	3200	SAE-10
614670882	1.18 *(19)*	3140	450	3200	SAE-12
614670892	1.37 *(22.5)*	2900	450	3000	SAE-12
614670902	1.58 *(26)*	2600	450	2850	SAE-12

3ME SERIE

- BI-DIRECTIONAL
- SAE-B 2 BOLT MOUNTING FLANGE
- 7/8" PARALLEL SHAFT
- 3/8" BSP DRAIN PORT

*** NEW HIGH PRESSURE SHAFT SEAL AVAILABLE : CAN GO UP TO 450 PSI COMPARE TO 43 PSI WITHOUT**

MODEL CODE	DISPLACEMENT IN³ (CM³) / REV.	MAX PSI	RPM MIN	RPM MAX	PORT INLET	PORT OUTLET
612978738	1.65 *(27)*	3600	600	3000	SAE-16	SAE-12
612978748	2.04 *(38)*		500			
612978768	2.86 *(46)*	3500		2750	SAE-20	SAE-16
612978778	3.30 *(55)*	3190	400	2500		

ALSO AVAILABLE

- OTHER SHAFT DIMENSIONS
- OUTRIGGER BEARING TO ACCEPT SIDE LOAD
- REAR PORT COVER
- INTERNAL DRAIN

PISTON MOTORS

- AVAILABLE WITH ISO, SAE AND DIN STANDARD MOUNTING
- HIGH SPEED AND HIGH EFFICIENCY MOTORS
- SMOOTH OPERATION OVER THE ENTIRE SPEED RANGE
- LONG LIFE WITH HIGH PERFORMANCES

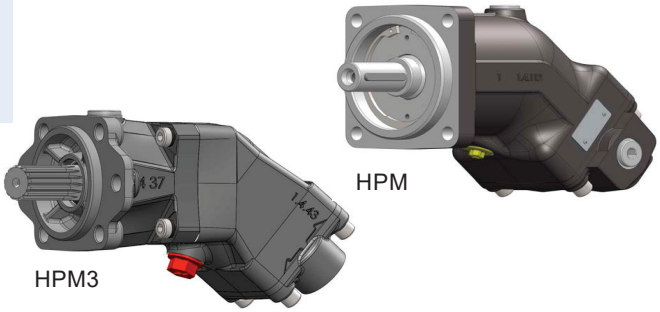

HPM3 SERIE

MODEL CODE	DISPLACEMENT IN³ *(CM³)* / REV.	PRESSURE (PSI)	RPM	PORT SIZE	MOUNTING FLANGE	SHAFT
213 074 05040	2.44 *(40)*	5075 CONT. 5800 INT.	100 MIN 1900 CONT. 2500 INT.	SAE-16	SAE-B 2/4B	7/8-13T SPLINE
214 080 05040					SAE-C 4B	1 1/4-14T SPLINE
214 091 05040						1 1/4 STRAIGHT
214 080 05047	2.87 *(47)*	4900		SAE-16	SAE-C 4B	1 1/4-14T SPLINE
214 090 05047						1 1/4 STRAIGHT
214 080 05055	3.36 *(55)*	4060		SAE-16	SAE-C 4B	1 1/4-14T SPLINE
214 090 05055						1 1/4 STRAIGHT
214 080 05064	3.90 *(64)*	3625			SAE-C 4B	1 1/4-14T SPLINE
214 091 05064						1 1/4 STRAIGHT

HPM SERIE

MODEL CODE	DISPLACEMENT IN³ *(CM³)* / REV.	PRESSURE (PSI)	RPM	PORT SIZE	MOUNTING FLANGE	SHAFT
221 074 06012	1.04 *(12)*	5075 CONT. 5800 INT.	100 MIN 6300 CONT. 6800 INT.	SAE-12	SAE-B 2B	7/8-13T SPLINE
221 091 06012						1" STRAIGHT
221 074 06017	1.04 *(17)*					7/8-13T SPLINE
221 091 06017						1" STRAIGHT
221 074 05025	1.53 *(25)*	5075 CONT. 5800 INT.	100 MIN 6300 CONT. 6800 INT.	SAE-12	SAE-B 2B	7/8-13T SPLINE
221 091 05025						1" STRAIGHT
221 077 05025						1"-15T SPLINE
221 074 05034	2.07 *(34)*	5075 CONT. 5800 INT.	100 MIN 6300 CONT. 6800 INT.	SAE-12	SAE-B 2B	7/8-13T SPLINE
221 091 05034						1" STRAIGHT
221 077 05034						1"-15T SPLINE
224 094 05040	2.44 *(40)*	5075 CONT. 5800 INT.	100 MIN 5000 CONT. 5500 INT.	SAE-16	SAE-C 4B	1 1/4 STRAIGHT
224 094 05047	2.87 *(47)*					
224 094 05055	3.36 *(55)*					
224 094 05064	3.90 *(64)*					
224 094 21080	4.88 *(80)*	5075 CONT. 5800 INT.	100 MIN 4000 CONT. 4500 INT.	CODE 62 FLANGE 3/4	SAE-C 4B	1 1/4 STRAIGHT
224 094 21091	5.55 *(91)*					
224 094 21108	6.59 *(108)*					

ANTI-CAVITATION VALVE

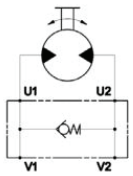

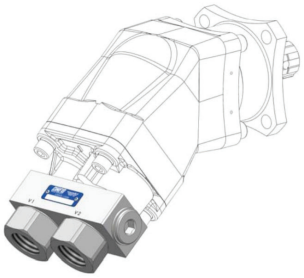

SPEED SENSOR

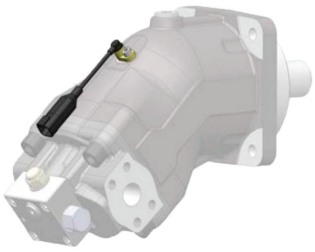

TMF 900
FIXED DISPLACEMENT AXIAL PISTON MOTORS

FEATURES:
- HIGH PRESSURE
- HIGH ROTATION SPEED
- EXCELLENT VOLUMETRIC AND MECHANICAL EFFICIENCY
- COMPACT DESIGN

	MAX			
DISPLACEMENT IN³ *(CM³)* / REV.	PSI (RATED)	PSI PEAK	RPM	WEIGHT KG *(LB)*
4.4 *(72)*	5800	6525	4100	28 *(62)*
5.5 *(90)*			4000	34 *(75)*
6.7 *(110)*			3800	

TMV 550
TWO SPEED AXIAL PISTON MOTORS

FEATURES:
- EXCELLENT WEIGHT/POWER RATIO
- HIGH ROTATION SPEED
- EXCELLENT VOLUMETRIC AND MECHANICAL EFFICIENCY
- COMPACT DESIGN

	MAX			
DISPLACEMENT IN³ *(CM³)* / REV.	PSI (RATED)	PSI PEAK	RPM	WEIGHT KG *(LB)*
2.7 *(46)*	4350	5800	4000	20 *(44)*
3.1 *(50)*				
3.9 *(64)*				

TMV 650
TWO SPEED AXIAL PISTON PLUG-IN MOTORS

FEATURES:
- SWASHPLATE DESIGN FOR HYDROSTATIC TRANSMISSIONS
- PLUG-IN MOUNTING
- HEAVY DUTY BEARINGS FOR LONG SERVICE LIFE
- HIGH PERMISSIBLE OUTPUT SPEED

	MAX			
DISPLACEMENT IN³ *(CM³)* / REV.	PSI (RATED)	PSI PEAK	RPM	WEIGHT KG *(LB)*
1.5 *(25)*	4350	5075	3500	15,6 *(34)*
1.8 *(30)*				
2.1 *(35)*				
2.3 *(38)*				
2.7 *(45)*				

TMF 600
FIXED DISPLACEMENT AXIAL PISTON MOTORS

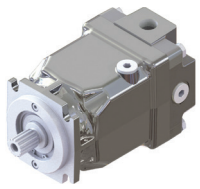

FEATURES:
- HIGH STARTING TORQUE
- SMOOTH OPERATION
- LONG SERVICE LIFE
- HIGH POWER DENSITY
- BUILT-IN VALVES AVAILABLE
- SPEED SENSOR AVAILABLE

	MAX			
DISPLACEMENT IN³ (CM³) / REV.	PSI (RATED)	PSI PEAK	RPM	WEIGHT KG *(LB)*
1.3 *(22)*	5075	6090	4200	11,3 *(25)*
1.7 *(28)*				
2.1 *(35)*			4000	17,8 *(39)*
2.4 *(40)*		5945	3600	
2.8 *(46)*				
3.1 *(50)*				
3.8 *(63)*		6090	3500	32,5 *(72)*
4.3 *(71)*				
4.6 *(75)*				
5.6 *(92)*				
100 *(6.1)*		5945	3240	

POWER UNITS

Our power units follow the same vigorous production and assembly processes as the rest of our products. The Hydro Custom power units are used in various applications :

- Car lift
- Snow plow
- Dock leveler
- Lift table
- Scissor lift
- Tail gate
- Fork lift
- Tipper trailer
- Dump trailer
- Garbage truck
- RV
- Wheel chair and medical

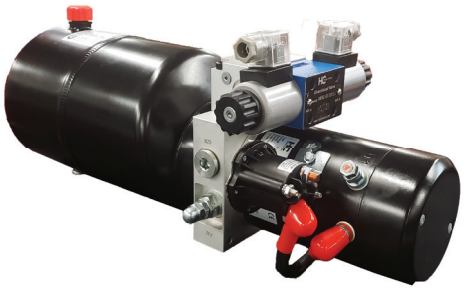

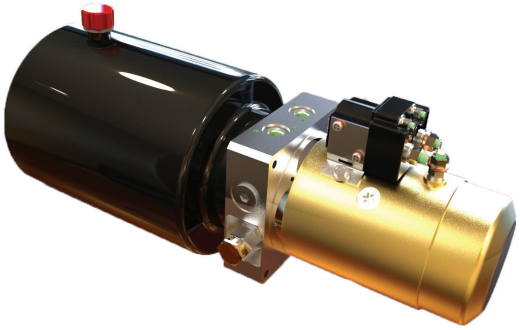

FEATURES AND BENEFITS

- Choice of configurations of multiple components such as pumps, valves, motors and tanks
- Experienced advisors in hydraulic circuit conception that will help you with the design of powers units according to your needs and requirements
- Power units can be fitted with blocks manifold designed to your specifications and manufactured in our workshops
- Mounting and testing of power units in a clean environment and without contamination, according to procedures established by highly qualified technicians
- Manufacturing customized solutions or series are possible taking into consideration the time of execution, the amount and the budgetary
- Price constraints
- 3D drawings, hydraulic and electrical plans and reports of tests (flow, pressure, speed, etc.) upon request
- Variety of standard power units distributed in our three warehouses across North America
- Several points of service in North America with hydraulic spare parts
- Well studied Quality/Price Ratio in order to provide you with the best possible offer
- Tank can be used horizontally or vertically

Whatever your requirements, our experienced team will be able to design the unique hydraulic solution that meets your individual specifications. Project appraisal, inventory request and orders are accessible to affiliated distributors.

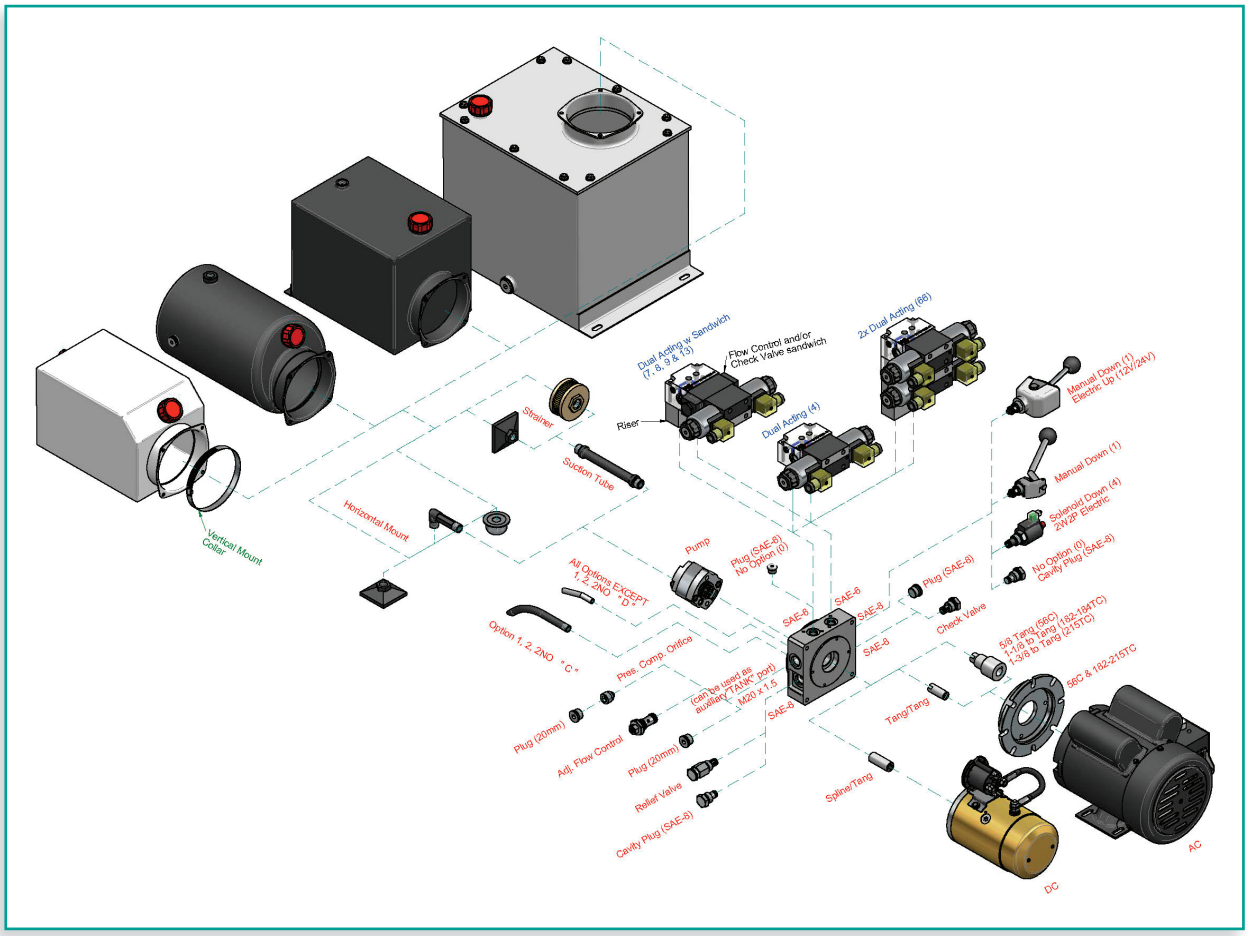

MODEL CODE

EXAMPLE

B EKD - F 2.5 PU 4 - A □

- B → DC/AC VOLTAGE
- EKD → HORSEPOWER
- F → PRESSURE
- 2.5 → PUMP
- PU → RESERVOIR
- 4 → SCHEMATIC
- A → VALVE VOLTAGE
- □ → REMOTE

VOLTAGE & POWER

DC MOTORS 2500 RPM

CODE	VOLTAGE & HORSEPOWER
1W2W	12V, 2 HP
2A2W	24V, 2.5 HP

AC MOTORS 1800 RPM

CODE	VOLTAGE
B	110/220V, 1 PH. (UP TO 2HP)
C	575V, 3 PH.
D	220V, 1PH. (3HP AND MORE)
E	208-230/460V, 3 PH.

CODE	HORSEPOWER
CKE	1/2 HP
DKE	3/4 HP
EKE	1 HP
EKD	1 HP (TANG SHAFT)
EKDB	1 HP + BUTTON & CABLE*
EKDT	1 HP + TOGGLE & CABLE*
FKE	1 1/2 HP
GKE	2 HP
GKD	2 HP (TANG SHAFT)
HKH	3 HP
JKJ	5 HP
KKK	7.5 HP

*AVAILABLE FOR 110/220V MOTORS ONLY

PRESSURE

CODE	PRESSURE
X	NO RELIEF
D	580 - 2300 PSI
F	1150 - 3000 PSI
H	1750 - 3600 PSI

PUMPS

CODE	MAX PSI *	MAX RPM	FLOW GPM	
			AC UNIT	DC UNIT
0.8	3300	6000	0.34	SEE CHARTS
1.2	3300	6000	0.51	
1.6	3300	6000	0.69	
2.1	3300	6000	0.90	
2.5	3300	6000	1.05	
3.2	3000	5000	1.36	
4.2	3000	4000	1.80	
6.0	2750	3000	2.50	
8.0	2320	2100	3.40	
8H	3700	5000	3.43	

*PLEASE REFER TO THE PRESSURE LIMITATION CHART

12VDC UNITS GPM FLOW CHART

	PUMP (CC)						
PSI	0.8	1.2	1.6	2.1	2.5	3.2	4.2
0	0,99	1,50	1,53	2,51	2,71	3,24	4,25
500	0,87	1,33	1,35	1,88	2,25	2,71	2,91
1000	0,85	1,18	1,12	1,65	1,98	2,31	2,14
1500	0,77	1,12	1,06	1,48	1,72	1,78	1,59
2000	0,73	1,04	0,95	1,35	1,53	1,65	1,19
2500	0,69	0,95	0,9	1,12	1,39	1,45	0,9
3000	0,63	0,71	0,79	1,03	1,22	1,32	0,85

WARNING! MORE THAN 250 AMPERES

24VDC UNITS GPM FLOW CHART

	PUMP (CC)						
PSI	0.8	1.2	1.6	2.1	2.5	3.2	4.2
0	1,12	1,74	2,05	2,38	2,77	3,31	3,43
500	0,90	1,34	1,62	1,78	2,11	2,54	2,64
1000	0,79	1,19	1,41	1,62	1,72	2,01	2,18
1500	0,73	1,04	1,21	1,37	1,40	1,45	1,78
2000	0,66	0,95	1,12	1,19	1,22	1,32	1,59
2500	0,63	0,89	0,99	1,06	1,16	1,21	1,39
3000	0,59	0,79	0,94	0,92	1,11	1,20	1,32

PRESSURE LIMITATION (PSI)

MOTOR & PUMP COMBINATION

HP	PUMP CODE									
	0.8	1.2	1.6	2.1	2.5	3.2	4.2	6.0	8.0	8H
1/2	2140	1400	1050	800	680	530	400	280	210	210
3/4	3200	2140	1580	1200	1020	800	600	420	320	320
1	3300	2850	2100	1600	1360	1060	800	560	430	430
1 1/2	3300	3300	3167	2430	2040	1600	1200	850	640	640
2	3300	3300	3300	3230	2720	2120	1600	1140	850	850
3	3300	3300	3300	3300	3300	3000	2430	1700	1270	1270
5	3300	3300	3300	3300	3300	3000	3000	2350	1700	2100
7 1/2	3300	3300	3300	3300	3300	3000	3000	2350	1700	2500

DIMENSIONS

DC MOTORS

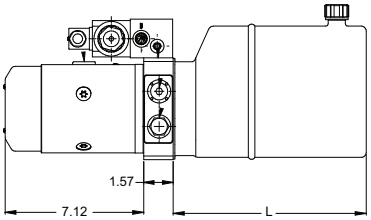

AC MOTORS

HP	DIM "C" (IN)
1/2	12.1
3/4	
1	
1 1/2	
2	
3	18.5
5	
7.5	20.9

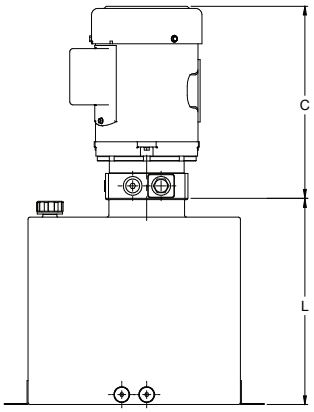

RESERVOIRS

BREATHER WITH DIPSTICK INCLUDED

PLASTIC HORIZONTAL

CODE	GALLONS	USABLE	DIM "L" (IN)
PA	1.0	0.7	7.9
PB	1.3	1.2	11.4
PL	1.6	1.4	13.2
PC	2.1	2.1	17.3
PD	2.6	2.5	20.9
PE	3.2	2.6	21.6
PG	3.7	2.9	23.4
PP	4.2	3.4	27.6
PQ	5.5	5.2	41.3

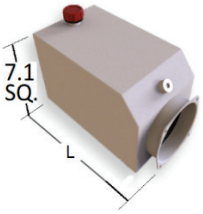

PLASTIC VERTICAL

CODE	GALLONS	USABLE	DIM "L" (IN)
QA	1.0	0.7	7.9
QB	1.3	1.2	11.4
QL	1.6	1.4	13.2
QC	2.1	2.1	17.3
QD	2.6	2.5	20.9
QE	3.2	2.6	21.6
QG	3.7	2.9	23.4
QP	4.2	3.4	27.6
QQ	5.5	5.2	41.3"

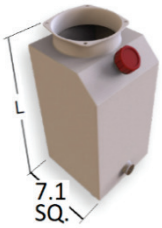

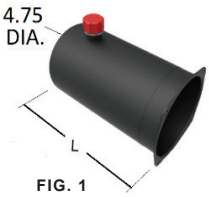

FIG. 1

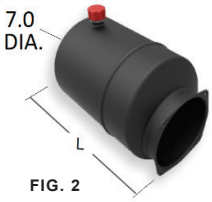

FIG. 2

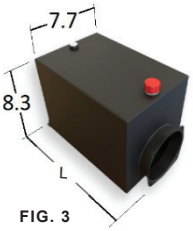

FIG. 3

FIG.4

FIG.5

STEEL HORIZONTAL

CODE	GALLONS	USABLE	DIM "L" (IN)	FIG.
RY	0.4	0.26	6.3	1
RZ	0.5	0.4	8.5	
RA	1.0	0.8	9.0	2
RB	1.3	1.1	10.6	
RL	1.6	1.4	11.4	
RC	2.1	1.9	14.6	
RD	2.6	2.4	17.3	
RE	3.2	3.0	21.3	
SD	2.6	2.2	10.2	3
SE	3.2	2.6	11.8	
SF	4.0	3.6	16.1	
SH	5.3	4.7	21.0	
SJ	6.6	6.2	27.8	

STEEL VERTICAL

CODE	GALLONS	USABLE	DIM "L" (IN)	FIG.
TA	1.0	0.7	9.0	4
TB	1.3	0.9	10.6	
TL	1.6	1.2	11.4	
TC	2.1	1.7	14.6	
TD	2.6	2.2	17.3	
TE	3.2	2.8	21.3	
UP	4.2	3.9	23.2	5
UQ	5.5	5.1	29.2	

CODE	GALLONS	USABLE	DIMS (IN)			FIG.
			H	W	L	
U2	6.5	6.0	11.0	13.4	13.0	6
U3	9.2	8.5	13.4	14.2	13.0	
U4	10.6	10.0	11.0	13.4	19.0	
U6	15.9	15.0	13.8	17.7	17.3	

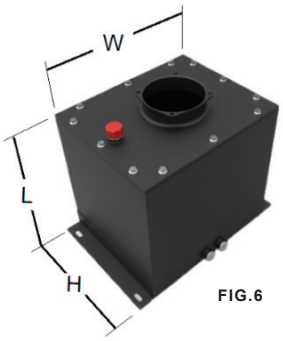

FIG.6

POPULAR SCHEMATICS

0	NO OPTION	1	SINGLE ACTING MANUAL DOWN	2	SINGLE ACTING SOLENOID DOWN	2NO	SINGLE ACTING NORMALLY OPEN	4	DOUBLE ACTING	66	2X DOUBLE ACTING

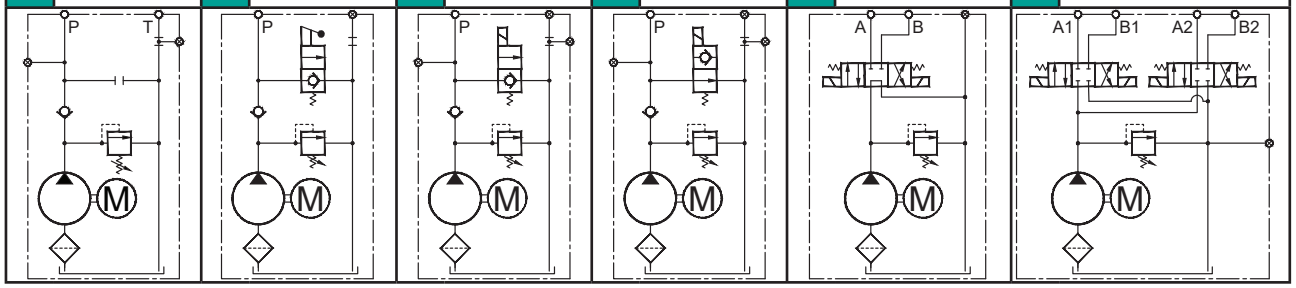

VALVES VOLTAGE

CODE	DESCRIPTION
OMIT	NO VOLTAGE
A	12VDC
B	24VDC
C	110VAC

REMOTE CONTROLS

CODE	DESCRIPTION
OMIT	NO REMOTE
R*	REMOTE CONTROL (10 FOOT CABLE)

* DC MOTORS ONLY

OTHER SCHEMATICS

14R	SNOW PLOW	61	TIPPER TRAILER	80	DOCK LEVELER	81	DOCK LEVELER 2

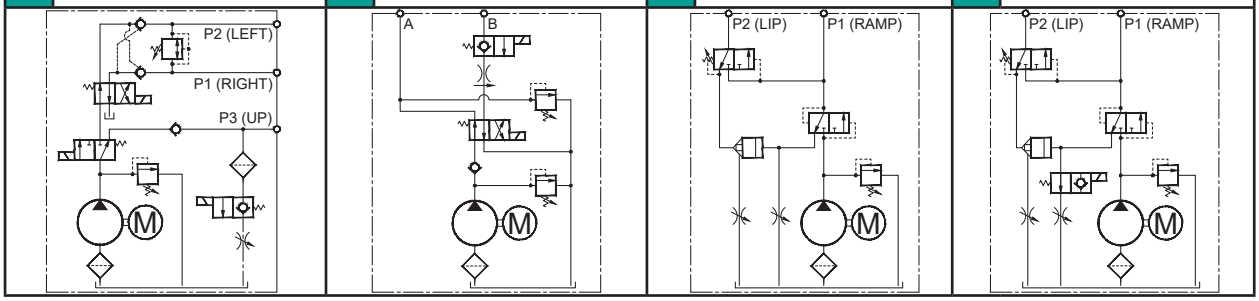

PICKUP SNOW PLOWS

SPECIAL DESIGN DC DRIVEN POWER PACK WITH REMOTE

MODEL CODE: 1W2W-F2.5RY14-AR

- CUSHION VALVE TO ABSORB SHOCKS ON LEFT-RIGHT MOVEMENT
- MADE FOR 3 SINGLE ACTING CYLINDERS
- LEFT/RIGHT LIFT AND FLOAT

REMOTE SPECIFICATIONS

- 2 AXIS JOYSTICK (LEFT, RIGHT, UP & DOWN)
- ROCKER SWITCH WITH LIGHT TO ACTIVATE FLOAT POSITION
- 10 FT. CABLE

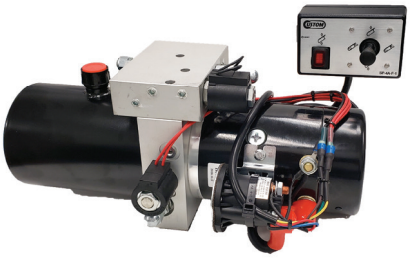

TIPPER TRAILERS

- DC DRIVEN HYDRAULIC POWER PACK FOR DUMPERS WITH REMOTE

DOCK LEVELERS

- AC DRIVEN POWER PACK USED ON ALL MAJOR LOADING DOCKS
- SEQUENTIAL LIP LIFT ACTION

CAR LIFTS

- AC DRIVEN POWER PACK USED ON CAR/TRUCK LIFTS FOR MAINTENANCE OR STORING APPLICATIONS

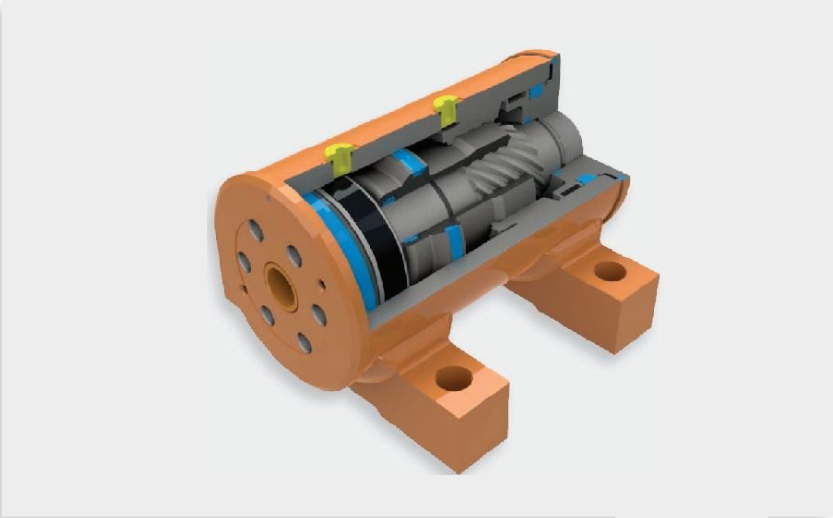

Powerful
High torque
High bearing

Drift free positioning
Zero internal leakage
Smooth operation
No external brake required

Backdrives in overload conditions
Hydraulic fuse
Prevents mechanical damage

Ultra-Compact
High power density
Fits in tight spaces

Streamline design
Eliminates linkages and bearings
Reduced bill of materials

Durable
Suitable for harsh environments
Moving parts enclosed

TEFC MOTORS

- CHOICE OF 1/3 TO 20HP
- 1800 RPM (3600 RPM AVAILABLE)
- SINGLE AND THREE PHASE
- NEMA FRAME FROM 56 TO 215TC
- IP44 CLASS, 1.15 FS

HP	MODEL CODE			FRAME
	115/230V SINGLE PHASE	575V 3 PHASE	208-230/460V 3 PHASE	
1/3	F56C1/3S4C	F56C1/3M4D	F56C1/3M4A	56C
1/2	F56C1/2S4C	F56C1/2M4D	F56C1/2M4A	
3/4	F56C3/42S4C	F56C3/4M4D	F56C3/4M4A	
1	F56C1S4	F56C1M4D	F56C1M4A	
1.5	F56C1.5S4C	F56C1.5M4D	F56C1.5M4A	
2	F56C2S4C	F56C2M4D	F56C2M4A	
3	-	F182TC3M4D	F182TC3M4A	182TC
5	-	F184TC5M4D	F184TC5M4A	184TC
7.5	-	F215TC7.5M4D	F215TC7.5M4A	213TC
10	-	F215TC10M4D	F215TC10M4A	215TC
15	-	F215TC15M4D	F215TC15M4A	

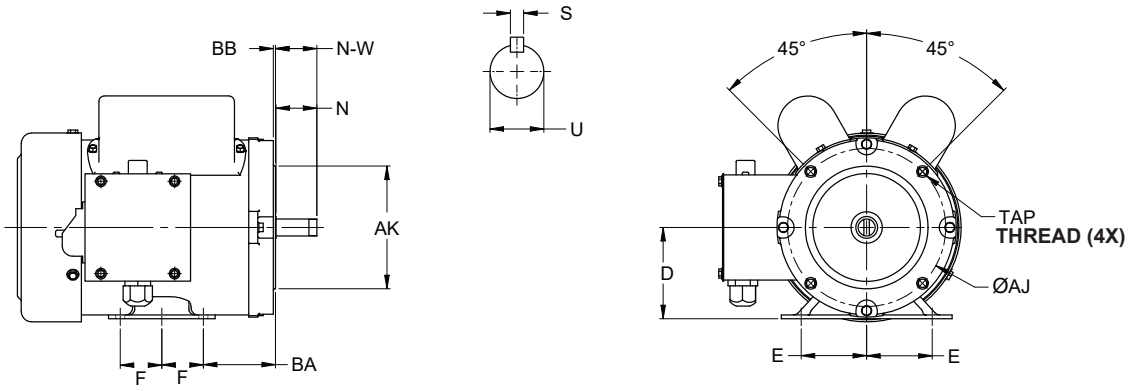

FRAME SIZE	DIMENSIONS (IN)											THREAD
	D	E	F	N	U	S	N-W	AJ	AK	BA	BB	
56C	3.50	2.44	1.50	1.93	5/8	3/16	1.88	5.88	4.50	2.75	0.16	3/8-16 UNC
143TC	3.50	2.75	2.00	2.31	7/8	3/16	2.25	5.88	4.50	2.25		
145TC			2.50									
182TC 184TC	4.50	3.75	2.25	2.88	1 1/8	1/4	2.75	7.25	8.50	2.75	0.25	1/2-12 UNC
213TC	5.25	4.25	2.75	3.38	1 3/8	5/16	3.13	7.25	8.50	3.50	0.25	
215TC			3.50									

- VERY ECONOMICAL & COMPACT DESIGN
- DIRECT MOUNT MOTOR CAN BE ORDERED SEPARATELY

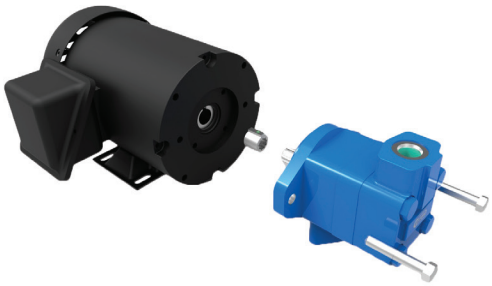

MODEL CODE

EXAMPLE: DM56CS4C - 4PS2.8

PUMP : 4-PS2.8 (GEAR TYPE, 2.8CC)

MOTOR : DM56CS4C (1HP, 115/230V)

MOTORS - TEFC - 1800 RPM

HP	MODEL CODE			FRAME	PUMP SIDE FLANGE & SHAFT
	115/230V SINGLE PHASE	575V THREE PHASES	208-230/460V THREE PHASES		
1/2	DM56C1/2S4CF	-	-	56C	SAE-A 2B FLANGE & SAE AA-4B FLANGE
3/4	DM56C3/4S4CF	-	-		
1	DM56C1S4CF	-	-		
1 1/2	DM56C1.5S4CF	-	-		
2	DM56C2S4CF	-	-		
3	DM56C3S4CF	-	-		
	-	DM215TC3M4DF	DM215TC3P4AF	215TC	SAE-A 2B FLANGE
5	-	DM215TC5M4DF	DM215TC5P4AF		
7 1/2	-	DM215TC7.5M4DF	DM215TC7.5P4AF		
10	-	DM215TC10M4DF	DM215TC10P4AF		
15	-	DM215TC15M4DF	DM215TC15P4AF		
20	-	DM215TC20M4DF	DM215TC20P4AF		

PUMPS GEAR TYPE

CODE	GPM	MODEL
4PS1.4	0,71	1.5 PE PAGE 68
4PS2.1	1,00	
4PS2.8	1,23	
4PS3.5	1,71	
2PE4.5	2,1	2 PE PAGE 69
2PE6.5	3,12	
2PE8.3	3,9	
2PE11.3	5,3	
2PE13.8	6,55	
2PE16	7,87	

VANE TYPE

CODE	GPM	MODEL
22S1	1,5	V10 PAGE 74
22S2	3,0	
22S3	4,5	
22S4	6,0	
22S5	7,5	
22S6	9,0	
22S7	10,5	
22S8	12,0	V20 PAGE 74
22S9	13,5	
22S10	15,0	
22S11	16,5	
22S12	18,0	
22S13	19,5	

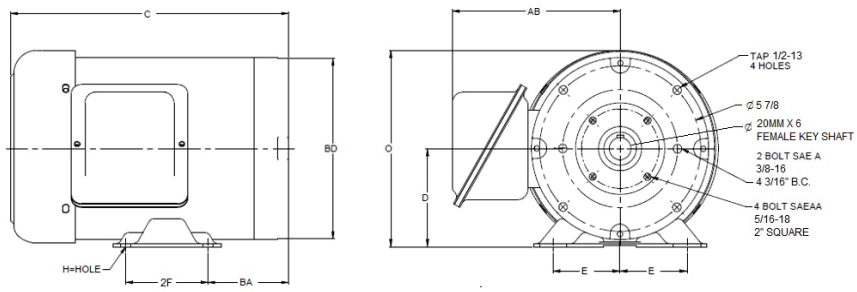

FRAME	DIMENSIONS (IN)								
	C	D	E	2F	H	O	BD	AB	BA
56C	10.12	3.5	2.43	3.0	0.34 SLOTS	7.0	6.5 DIA	6.12	2.94
215TC	15.62	5.25	4.25	7.0	0.40 DIA	11.0	8.5 DIA	8.38	3.5

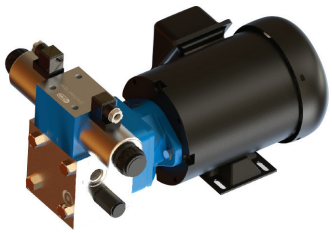

ALSO AVAILABLE
- HYDRAULIC CIRCUIT DIRECTLY MOUNTED ON THE PUMP
- VERY COMPACT DESIGN. LESS PIPING
- MANY OPTIONS
- OTHER OPTIONS AVAILABLE

PUMPS OVERVIEW

ALUMINIUM GEAR PUMPS

1.5PE
From 0.71 to 5.22 GPM
Up to 5000 RPM
Up to 3625 PSI P.58

2PE
From 2.1 to 12.31 GPM
Up to 4000 RPM
Up to 3600 PSI P.59

2.5PB
From 2.81 to 20.9 GPM
Up to 3000 RPM
Up to 3600 PSI P.60

3PE
From 9.7 to 34.9 GPM
Up to 3000 RPM
Up to 3600 PSI P.61

VANE PUMPS

V10/V20
From 1.5 to 19.5 GPM
Up to 4800 RPM
Up to 2500 PSI P.64

25VQ/35VQ/45VQ
From 18 to 90 GPM
Up to 2700 RPM
Up to 3000 PSI P.64

VARIABLE DISPLACEMENT
From 3 to 10.5 GPM
Up to 1800 RPM
Up to 1700 PSI P.65

QUIET GEAR PUMPS

GR1
From 6.1 to 21.2 GPM
Up to 3000 RPM
Up to 3800 PSI P.62

CAST IRON GEAR PUMPS

PG330
From 6.1 to 21.2 GPM
Up to 3000 RPM
Up to 3800 PSI P.63

PNC
From 38.58 to 71.3 GPM
Up to 3000 RPM
Up to 3500 PSI P.63

PISTON PUMPS

PPV VARIABLE DISPLACEMENT
From 28.5 to 61.8 GPM
Up to 2500 RPM
Up to 5433 PSI P.66

BENT AXIS
From 6.1 to 21.2 GPM
Up to 3000 RPM
Up to 3800 PSI P.66

A10V SWASHPLATE
From 8.5 to 66.5 GPM
Up to 3300 RPM
Up to 3000 PSI P.67

OTHER PUMPS

PTO PUMP
From 7 to 22.5 GPM
Up to 1000 RPM
Up to 2000 PSI P.68

PTO PUMP
From 11 to 19.2 GPM
Up to 540 RPM
Up to 3600 PSI P.68

2 STAGE PUMPS
Up to 3600 RPM
Up to 3000 PSI P.68

HAND PUMPS

HAND PUMP
Up to 3500 PSI P.69

PTO

PTO
For transmissions and motors
SAE and DIN P.68

HYDROSTATIC PUMPS

TPV 1100
Up to 3600 RPM
Up to 4350 PSI P.70

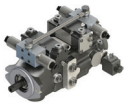

TPV 1300
Up to 3600 RPM
Up to 4350 PSI P.70

TPV 1500
Up to 3600 RPM
Up to 4350 PSI P.71

TPV 3600
Up to 3600 RPM
Up to 5800 PSI P.72

TPV 4300
Up to 3600 RPM
Up to 4060 PSI P.72

TPV 5000
Up to 3600 RPM
Up to 4350 PSI P.73

1.5PE SERIE

- CLOCKWISE ROTATION
- 1/2 STRAIGHT KEY SHAFT

ALSO AVAILABLE
- COUNTERCLOCKWISE ROTATION
- OTHER SHAFTS & FLANGES
- TANDEM PUMPS & MULTIPLE PUMPS

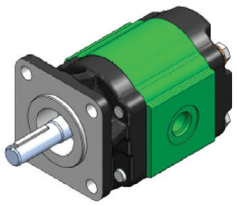

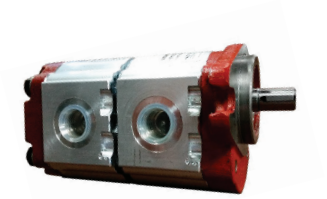

1.5PE TANDEM PUMP

MODEL CODE	DISPLACEMENT IN^3 (CM^3) / REV.	GPM @ 1800 RPM	MAX RPM	MAX PSI	PORT SIZE		MOUNTING	DIM "H" (IN)
					INLET	OUTLET		
6109 1030 2	0.091 *(1.4)*	0.71	5000	3625	SAE-08	SAE-06	SAE-AA 2 BOLT	3.26
6109 1050 2							SAE-AA 4 BOLT	
6109 1031 2	0.128 *(2.1)*	1.00	5000	3625			SAE-AA 2 BOLT	3.34
6109 1051 2							SAE-AA 4 BOLT	
6109 1032 2	0.158 *(2.8)*	1.23	4500	3625			SAE-AA 2 BOLT	3.42
6109 1052 2							SAE-AA 4 BOLT	
6109 1108 2	0.219 *(3.5)*	1.71	4500	3625			SAE-AA 2 BOLT	3.49
6109 1053 2							SAE-AA 4 BOLT	
6109 1034 2	0.256 *(4.1)*	1.99	4000	3625			SAE-AA 2 BOLT	3.56
6109 1054 2							SAE-AA 4 BOLT	
6109 1109 2	0.299 *(5.2)*	2.33	4000	3335	SAE-08	SAE-06	SAE-AA 2 BOLT	3.68
6109 1055 2							SAE-AA 4 BOLT	
6109 1036 2	0.354 *(6.2)*	2.76	3600	3140			SAE-AA 2 BOLT	3.79
6109 1056 2							SAE-AA 4 BOLT	
6109 1110 2	0.457 *(7.6)*	3.56	3300	2900			SAE-AA 2 BOLT	3.95
6109 1057 2							SAE-AA 4 BOLT	
6109 1038 2	0.57 *(9.3)*	4.44	3000	2610			SAE-AA 2 BOLT	4.14
6109 1058 2							SAE-AA 4 BOLT	
6109 1039 2	0.67 *(11)*	5.22	3000	2465			SAE-AA 2 BOLT	4.33
6109 1059 2							SAE-AA 4 BOLT	

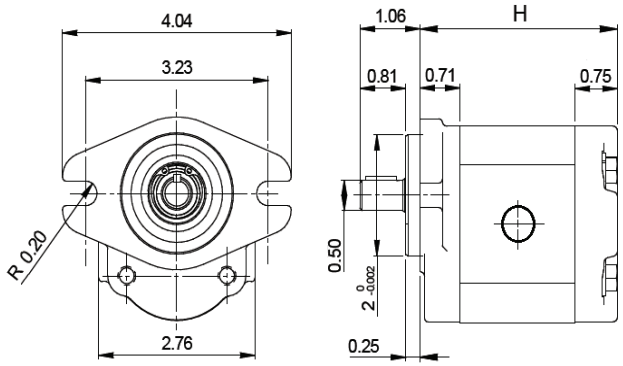

SAE AA - 2 BOLT
(R80S0 CODE)

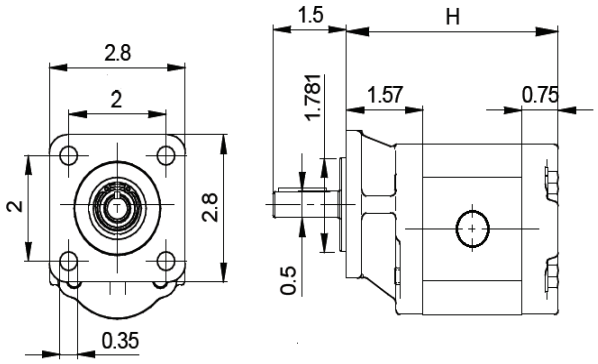

SAE AA - 4 BOLT
(R83S1 CODE)

2PE SERIE

- CLOCKWISE ROTATION
- SAE-A 2 BOLT MOUNTING
- INLET: SAE-12 OUTLET: SAE-10

ALSO AVAILABLE
- COUNTERCLOCKWISE ROTATION
- OTHER SHAFTS & FLANGES
- TANDEM PUMPS & MULTIPLE PUMPS
- REAR COVERS WITH INTEGRATED VALVES
- OUTBOARD BEARING

MODEL CODE	DISPLACEMENT IN^3 *(CM^3)* / REV.	GPM @ 1800 RPM	MAX RPM	MAX PSI	SHAFT	DIM "H" (IN)
6120 8164 2	0.27 *(4.5)*	2.1	4000	3600	5/8" STRAIGHT	2.58
6120 3372 2					5/8-9T SPLINE	
6120 3757 2					3/4" STRAIGHT	
6120 9594 2	0.40 *(6.5)*	3.12	4000	3600	5/8" STRAIGHT	2.72
6120 9596 2					5/8-9T SPLINE	
6120 9595 2					3/4" STRAIGHT	
6120 81662	0.50 *(8.3)*	3.9	3500	3600	5/8" STRAIGHT	2.82
6120 8055 2					5/8-9T SPLINE	
6120 3542 2					3/4" STRAIGHT	
6120 3475 2					3/4-11T SPLINE	
6120 8167 2	0.68 *(11.3)*	5.3	3500	3600	5/8" STRAIGHT	3.10
6120 7904 2					5/8-9T SPLINE	
6120 3543 2					3/4" STRAIGHT	
6120 3512 2					3/4-11T SPLINE	
6120 8168 2	0.84 *(13.8)*	6.55	3500	3600	5/8" STRAIGHT	3.25
6120 8056 2					5/8-9T SPLINE	
6120 3544 2					3/4" STRAIGHT	
6120 3683 2					3/4-11T SPLINE	
6120 8169 2	1.01 *(16)*	7.87	3000	3600	5/8" STRAIGHT	3.40
6120 8309 2					5/8-9T SPLINE	
6120 3455 2					3/4" STRAIGHT	
6120 1808 2					3/4-11T SPLINE	
6120 8170 2	1.15 *(19)*	8.96	3000	3140	5/8" STRAIGHT	3.72
6120 7906 2					5/8-9T SPLINE	
6120 3456 2					3/4" STRAIGHT	
6120 3514 2					3/4-11T SPLINE	
6120 8171 2	1.37 *(22.5)*	10.68	2750	2900	5/8" STRAIGHT	3.94
6120 7907 2					5/8-9T SPLINE	
6120 3276 2					3/4" STRAIGHT	
6120 3532 2					3/4-11T SPLINE	
6120 8172 2	1.58 *(26)*	12.31	2500	2600	5/8" STRAIGHT	4.17
6120 7908 2					5/8-9T SPLINE	
6120 3457 2					3/4" STRAIGHT	
6120 8066 2					3/4-11T SPLINE	

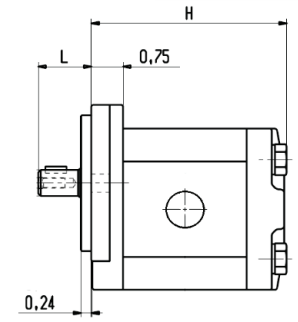

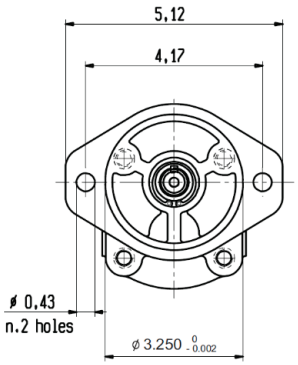

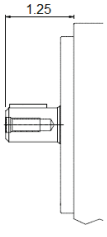

5/8"
STRAIGHT KEY
CODE 82

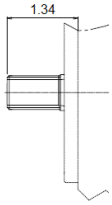

5/8-9T
SPLINED
CODE 52

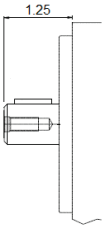

3/4"
STRAIGHT KEY
CODE 85

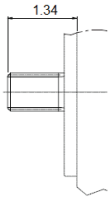

3/4-11T
SPLINED
CODE 54

OTHER PORT CONNECTIONS

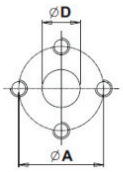

EUROPEAN FLANGE
CODE P

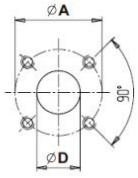

"BOSCH" FLANGE
CODE B

OTHER SHAFTS

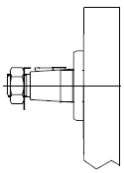

1:5 TAPERED CODE 25
1:8 TAPERED CODE 28

OTHER MOUNTING FLANGES

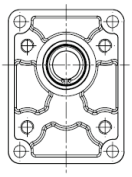

36.5MM PILOT DIA.
CODE P1

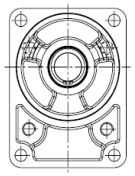

80MM PILOT DIA.
CODE B1

50MM PILOT DIA.
CODE B4/B5

2.5PB SERIE

- CLOCKWISE ROTATION
- SAE-B 2 BOLT MOUNTING

ALSO AVAILABLE
- SAE-A - 2 BOLT
- COUNTERCLOCKWISE ROTATION
- OTHER SHAFTS & FLANGES
- TANDEM PUMPS & MULTIPLE PUMPS
- REAR COVERS WITH INTEGRATED VALVE

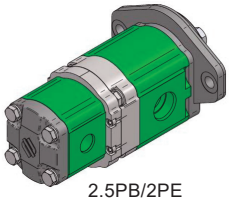

2.5PB/2PE COMBINATION

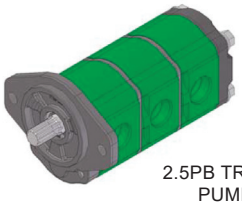

2.5PB TRIPLE PUMP

MODEL CODE	DISPLACEMENT IN^3 (CM^3) / REV.	GPM @ 1800 RPM	MAX RPM	MAX PSI	PORT SIZE		SHAFT	DIM "H" (IN)
					INLET	OUTLET		
ONLY FOR MULTIPLE 2.5PB REAR PUMPS	0.36 *(5.5)*	2.81	3000	3600	SAE-12	SAE-10	-	4.02
							-	
	0.50 *(8.3)*	3.88	3000	3600			-	4.12
							-	
6138 xxxx x	0.72 *(11.5)*	5.61	3000	3600			7/8" KEY	4.26
6138 7479 2							7/8-13T SPLINE	
6138 xxxx x	0.86 *(13.8)*	6.7	3000	3600	SAE-12	SAE-10	7/8" KEY	4.35
6138 7470 2							7/8-13T SPLINE	
6138 7391 2	0.97 *(16)*	7.5	3000	3600			7/8" KEY	4.42
6138 7390 2							7/8-13T SPLINE	
6138 7393 2	1.17 *(19)*	9.1	3000	3600			7/8" KEY	4.56
6138 7392 2							7/8-13T SPLINE	
6138 7125 2	1.35 *(22)*	10.5	3000	3600			7/8" KEY	4.07
6138 7117 2							7/8-13T SPLINE	
6138 7373 2	1.53 *(25)*	11.9	3000	3600	SAE-16	SAE-12	7/8" KEY	4.79
6138 7372 2							7/8-13T SPLINE	
6138 7127 2	1.68 *(28)*	13	3000	3600			7/8" KEY	5.28
6138 7119 2							7/8-13T SPLINE	
6138 7128 2	1.97 *(32)*	15.3	3000	3300			7/8" KEY	5.49
6138 7120 2							7/8-13T SPLINE	
6138 7129 2	2.32 *(38)*	18	2750	2900			7/8" KEY	5.73
6138 7121 2							7/8-13T SPLINE	
6138 7130 2	2.69 *(44)*	20.9	2500	2465			7/8" KEY	6.03
6138 7122 2							7/8-13T SPLINE	

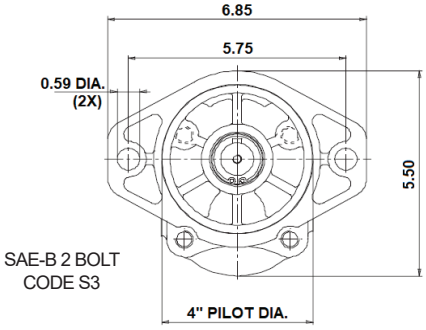

SAE-B 2 BOLT
CODE S3

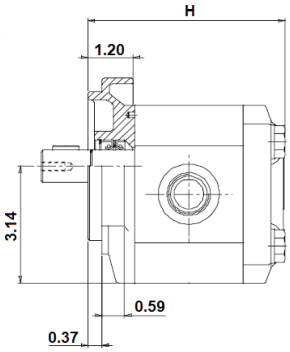

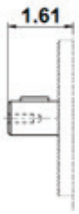

7/8"
STRAIGHT KEY
CODE 87

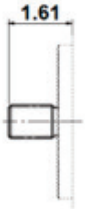

7/8-13T
SPLINED
CODE 55

OTHER PORT CONNECTIONS

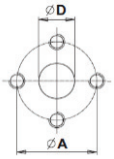

EUROPEAN FLANGE
CODE P

OTHER SHAFTS

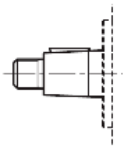

1:8 TAPERED
CODE 38

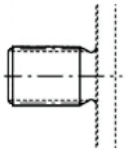

3/4-11T SPLINED
CODE 54

OTHER MOUNTING FLANGES

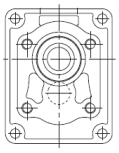

50.8mm PILOT
CODE P2

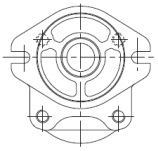

SAE A - 2 BOLT, 3 1/4" PILOT
CODE S2

3PE SERIE

- CLOCKWISE ROTATION
- SAE-B 2 BOLT MOUNTING

ALSO AVAILABLE
- COUNTERCLOCKWISE ROTATION
- OTHER SHAFTS & FLANGES
- TANDEM PUMPS & MULTIPLE PUMPS
- REAR COVERS WITH INTEGRATED VALVE

3PE/2PE COMBINATION

MODEL CODE	DISPLACEMENT IN^3 *(CM^3)* / REV.	GPM @ 1800 RPM	MAX RPM	MAX PSI	PORT SIZE		SHAFT	DIM "H" (IN)
					INLET	OUTLET		
6130 1261 2	1.25 *(21)*	9.7	3000	3600	SAE-16	SAE-12	7/8" KEY	5.06
6130 1111 2							7/8-13T SPLINE	
6130 1262 2	1.65 *(27)*	12.8	3000	3600			7/8" KEY	5.26
6130 1112 2							7/8-13T SPLINE	
6130 1263 2	2.04 *(33)*	15.9	3000	3600			7/8" KEY	5.46
6130 1103 2							7/8-13T SPLINE	
6130 1264 2	2.36 *(38)*	18.4	3000	3600			7/8" KEY	5.61
6130 1113 2							7/8-13T SPLINE	
6130 1265 2	2.86 *(46)*	22.3	2750	3500	SAE-20	SAE-16	7/8" KEY	6.24
6130 7967 2							7/8-13T SPLINE	
6130 1266 2	3.30 *(55)*	25.7	2500	3190			7/8" KEY	6.48
6130 1104 2							7/8-13T SPLINE	
6130 1267 2	3.85 *(65)*	30	2500	2900			7/8" KEY	6.76
6130 1114 2							7/8-13T SPLINE	
6130 1268 2	4.48 (73.4)	34.9	2500	2610			7/8" KEY	7.03
6130 1115 2							7/8-13T SPLINE	

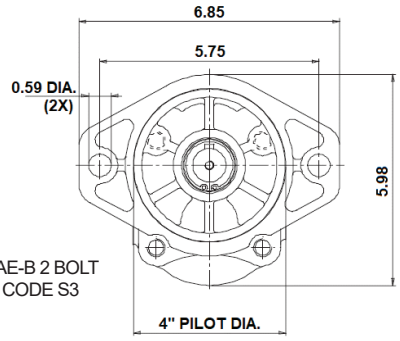

SAE-B 2 BOLT
CODE S3

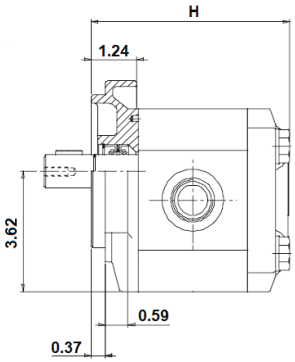

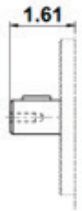

7/8"
STRAIGHT KEY
CODE 87

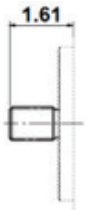

7/8-13T
SPLINED
CODE 55

OTHER PORT CONNECTIONS

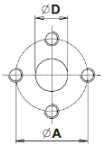

EUROPEAN
FLANGE
CODE P

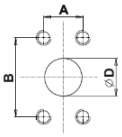

CODE FLANGE 61
SALAMI CODE S

OTHER SHAFTS

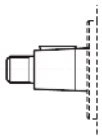

1:8 TAPERED
CODE 38

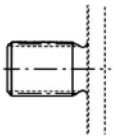

1-15T SPLINED
CODE 56

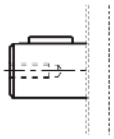

1" STRAIGHT
KEY
CODE 88

OTHER MOUNTING FLANGES

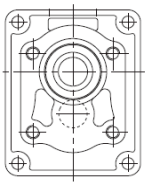

50.8mm PILOT
CODE P2

QUIET GEAR PUMP 55DB

SETTIMA MECCANICA CONTINUUM® REPRESENTS THE NO NOISE ALTERNATIVE TO GEAR AND VANE PUMPS TO CREATE A BETTER WORKING ENVIRONMENT. PRODUCTS ARE IDEAL FOR HIGH PRESSURE APPLICATIONS DESIGNED WITH A NO NOISE PUMP TECHNOLOGY CAPABLE OF ELIMINATING ACOUSTIC EMISSIONS AND VIBRATIONS.

ADVANTAGES:

- SPECIAL ROTORS PROFILE AVOIDS OIL ENCAPSULATION
- **NO NOISE - AVERAGE 15DB (A) - LESS NOISE COMPARED TO STANDARD GEAR AND VANE PUMPS**
- EXTREMELY LOW VIBRATIONS AND PULSATIONS
- VERY HIGH EFFICIENCY FOR A WIDE RANGE OF SPEEDS (UP TO 6.500 RPM)
- MAXIMUM OPERATING PRESSURE UP TO 300 BAR
- INTERCHANGEABLE WITH STANDARD GEAR PUMPS

NO NOISE CONTINUUM® TECHNOLOGY

PARAMETERS:

PARAMETERS INFLUENCING EMISSIONS OF HYDRAULIC NOISE ARE:

- CAVITATION
- PRESSURE PEAKS RISING FROM TRAPPED FLUID BETWEEN GEAR TEETH
- RIPPLE OR FLOW PULSATION

DIFFERENTLY FROM TRADITIONAL GEAR PUMPS, THE PATENTED CONTINUUM® HELICAL ROTORS PROFILE DOES NOT TRAP ANY FLUID VOLUME, RESULTING IN A GENTLE FLUID TRANSMISSION AND AN OUTSTANDING REDUCTION OF PULSATIONS.

MODEL CODE	DISPLACEMENT IN^3 *(CM^3)* / REV.	GPM @1800 RPM	MAX RPM	MAX PSI	PORT SIZE		SHAFT	MOUNT
					INLET	OUTLET		
28-4.2AA2B10/08-1/2K	0.26 *(4.2)*	2.03	3600	3394	SAE-10	SAE-08	1/2" KEY	SAE-AA 2 BOLT
28-6.4AA2B10/08-1/2K	0.39 *(6.4)*	3.04		3394				
28-8.3AA2B10/08-1/2K	0.51 *(8.3)*	3.97		3031				
28-10.2AA2B10/08-1/2K	0.62 *(10.2)*	4.83		2741				
28-12.9AA2B10/08-1/2K	0.79 *(12.9)*	6.16		2466				
33-10.1A2B12/10-5/8K	0.62 *(10.1)*	4.83	3600	3989	SAE-12	SAE-10	5/8" KEY	SAE-A 2 BOLT
33-12.6A2B12/10-5/8K	0.77 *(12.6)*	6		3844				
33-15.2A2B12/10-5/8K	0.93 *(15.2)*	7.25		3495				
33-18.2A2B16/12-5/8K	1.11 *(18.2)*	8.65		2988	SAE-16	SAE-12		
38-15.9A2B16/12-5/8K	*0.97 (15.9)*	7.56	3600	3884	SAE-16	SAE-12		SAE-B 2 BOLT
38-17.92B16/12-5/8K	1.09 *(17.9)*	8.49		3582				
38-20A2B16/12-5/8K	1.09 *(17.9)*	9.51		3336				
38-22.1A2B16/12-5/8K	1.35 *(22.1)*	10.6		3220				
38-25.2A2B16/12-5/8K	1.54 *(25.2)*	12		2901				
38-28.3A2B16/12-5/8K	1.73 *(28.3)*	13.48		2611				

PG330 SERIE

- CLOCKWISE ROTATION
- SAE B -2/4 BOLT MOUNTING
- 7/8-13T SPLINED SHAFT

ALSO AVAILABLE
- COUNTERCLOCKWISE ROTATION
- OTHER SHAFTS & FLANGES
- TANDEM PUMPS & MULTIPLE PUMPS
- OUTBOARD BEARING

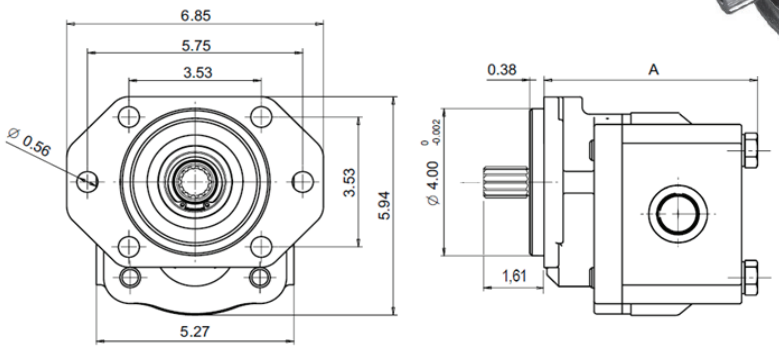

MODEL CODE	DISPLACEMENT IN^3 (CM^3) / REV.	GPM @ 1800 RPM	MAX RPM	MAX PSI	PORT SIZE		DIM "A" (IN)
					INLET	OUTLET	
6151 0000 2	1.43 *(23)*	6.1	3000	3800	SAE-16	SAE-12	5.54
6151 0001 2	1.74 *(28)*	7.5		4000			5.70
6151 0002 2	2.1 *(34)*	9		4000			5.88
6151 0003 2	2.46 *(40)*	10.6	2700	3800			6.00
6151 0004 2	2.89 *(47)*	12.5		4000			6.94
6151 0005 2	3.37 *(55)*	14.5		3800	SAE-20	SAE-16	7.18
6151 0006 2	3.92 *(64)*	16.9	2500	3500			7.45
6151 0007 2	4.48 *(73)*	19.2		3200			7.73
6151 0008 2	4.91 *(80)*	21.2		2900			7.96

PNC SERIE

- CLOCKWISE ROTATION
- SAE B -2/4 BOLT MOUNTING
- 1 1/4-14T SPLINED SHAFT

ALSO AVAILABLE
- SMALLER DISPLACEMENTS
- COUNTERCLOCKWISE ROTATION
- OTHER SHAFTS & FLANGES
- OUTBOARD BEARING
- TANDEM PUMPS & MULTIPLE PUMPS

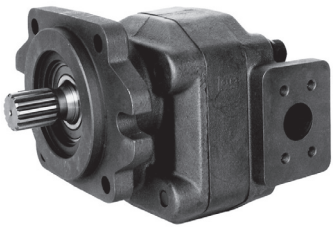

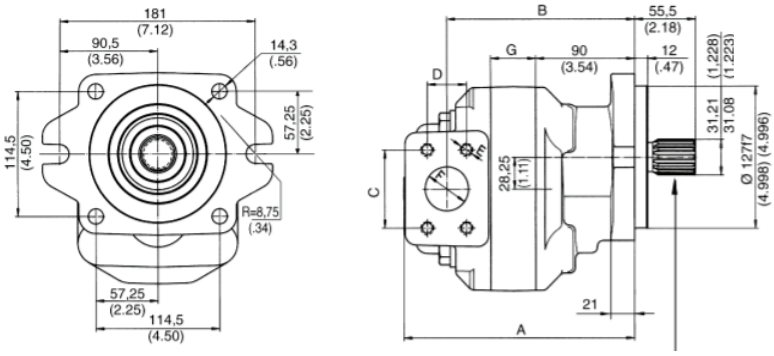

MODEL CODE	DISPLACEMENT IN^3 (CM^3) / REV.	GPM @ 1800 RPM	MAX RPM	MAX PSI	PORT SIZE		DIM "A" (IN)
					INLET	OUTLET	
1PNC 125 DG09M	5.08 *(83)*	39.5	3000	3500	1 1/2" CODE FLANGE 61 (M12 THREAD)	1 1/4" CODE FLANGE 61 (M10 THREAD)	8.83
1PNC 150 DG09M	6.1 *(100)*	47.5			2" CODE FLANGE 61 (M12 THREAD)	1 1/2" CODE FLANGE 61 (M12 THREAD)	9.17
1PNC 175 DG09M	7.11 *(116)*	55.5	2500	3200			9.48
1PNC 200 DG09M	8.13 *(133)*	63.3	2000	2850			9.82
1PNC 225 DG09M	9.15 *(150)*	71.3	1750	2500			10.13

V10/V20 SERIES

- FULLY INTERCHANGEABLE WITH VICKERS

ALSO AVAILABLE
- NPT PORTS
- OTHER TYPE OF SHAFTS, PORTS
- COUNTERCLOCKWISE ROTATION
- PRIORITY REAR COVER

MODEL CODE	GPM @ 1800 RPM	MAX RPM	MAX PSI	PORT SIZE		SHAFT	MOUNTING
				INLET	OUTLET		
V10-1S1S-1C20	1.5	4800	2500	SAE-16	SAE-08	3/4 KEY	SAE-A 2 BOLT
V10-1S2S-1C20	3	4500					
V10-1S3S-1C20	4.5	4000					
V10-1S4S-1C20	6	3400					
V10-1S5S-1C20	7.5	3200					
V10-1S6S-1C20	9	3000	2200				
V10-1P7S-1C20	10.5	2800	2000				
V20-1S7S-1C11	10.5	3000	2500	SAE-20	SAE-12		
V20-1S9S-1C11	13.5	2800					
V20-1S11S-1C11	16.5	2400					
V20-1P13P-1C11	19.5						

25VQ/35VQ/45VQ SERIES

- FULLY INTERCHANGEABLE WITH VICKERS

ALSO AVAILABLE
- OTHER TYPE OF SHAFTS, PORTS
- COUNTERCLOCKWISE ROTATION
- DOUBLE & TRIPLE PUMPS

35VQ

3525VQ

MODEL CODE	GPM @ 1800 RPM	MAX RPM	MAX PSI	PORT SIZE		SHAFT	MOUNTING
				INLET	OUTLET		
25VQ12A-1C20	18	2700	3000	1 1/2 CODE FLANGE 61	1" CODE FLANGE 61	7/8 KEY	SAE-B 2 BOLT
25VQ14A-1C20	21						
25VQ17A-1C20	25	2500					
25VQ21A-1C20	31.5						
35VQ25A-1C20	37.5	2500		2" CODE FLANGE 61	1 1/4 CODE FLANGE 61	1 1/4 KEY	SAE-C 2 BOLT
35VQ30A-1C20	45						
35VQ35A-1C20	52.5	2400					
35VQ38A-1C20	57						
45VQ42A-1C20	63	2200	2500	3" CODE FLANGE 61	1 1/2 CODE FLANGE 61		
45VQ50A-1C20	75						
45VQ60A-1C20	90						

VP VARIABLE DISPLACEMENT VANE PUMPS

- FULLY ADJUSTABLE FLOW AND PRESSURE COMPENSATOR. HIGH EFFICIENCY, LOW TEMPERATURE AND ENERGY-SAVING DESIGN
- VERY LOW NOISE, QUICK RESPONSE AND STEADY OPERATION
- ADJUSTMENT SCREWS FOR BOTH PRESSURE SETTING AND MAXIMUM FLOW SETTINGS

SPEED : MINIMUM : 800 RPM, MAXIMUM : 1800 RPM

DRAIN MUST BE INSTALLED UNDER OIL LEVEL AND BELOW 7 PSI

PIPE LENGTH SHOULD BE SHORTER THAN 3 FT

INDEPENDENT RETURN LINE TO TANK REQUIRED

MODEL CODE

SINGLE VPSF X X X

DISPLACEMENT | PSI RANGE | SHAFT SIGN

DOUBLE VPDF X X X X X

DISPLACEMENT FRONT PUMP | PSI RANGE FRONT PUMP | DISPLACEMENT BACK PUMP | PSI RANGE BACK PUMP | SHAFT

DISPLACEMENT

CODE	GPM @1800 RPM
12	3.17
15	3.96
20	5.28
30	7.93
40	10.56

PSI RANGE

CODE	PSI RANGE
A	140-280
B	215-500
C	425-780
D	710-1000

SHAFT

CODE	SHAFT
OMIT	PARALLEL KEY SHAFT
S	SPLINE SHAFT

SINGLE

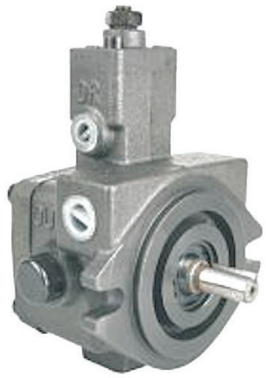

DOUBLE

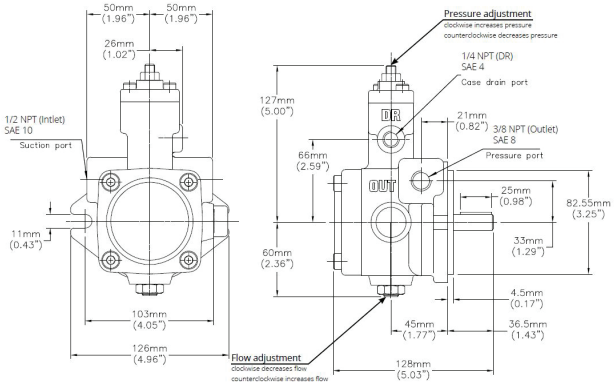

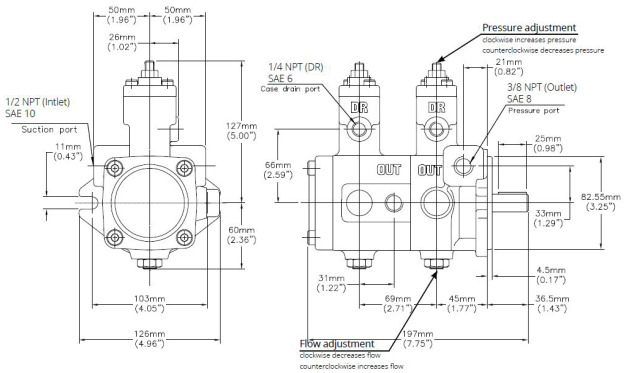

PPV LOAD SENSING VARIABLE DISPLACEMENT PUMPS

- SPECIFICALLY DESIGNED FOR THE NEEDS OF THE TRUCK MARKET
- WELL ADAPTED FOR APPLICATIONS IN : CRANES, REFUSE VEHICLES, SALT SPREADERS, SNOW EQUIPEMENT, CONSTRUCTION EQUIPEMENT AND TIPPER TRUCKS
- EXTREMELY COMPACT IN SIZE TO ALLOW DIRECT MOUNTING ON VEHICLE ENGINE OR PTO'S

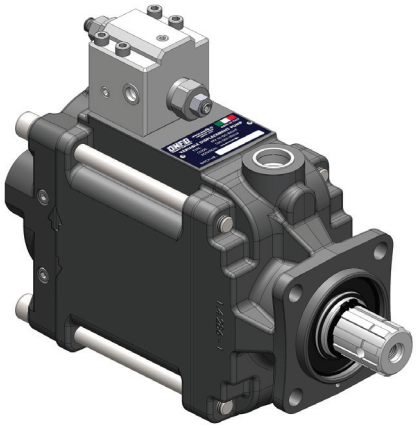

MODEL CODE	DISPLACMENT IN^3 *(CM^3)* / REV.	GPM @ 1800 RPM	MAX PSI	MAX RPM	MOUNTING FLANGE	SHAFT	PORT SIZE	ROTATION	OPTIONS
650 151 06LS1	3.66 *(60)*	28.5	5400 CONT. 5800 INT.	500 MIN 2500 CONT.	ISO 80MM 4B	DIN 5462	INLET: 50MM FLANGE	CW	-
650 151 06LS2									VOLUME STOP
651 251 06LS1					SAE-C 4B	1 1/4-14T SPLINE	OUTLET: SAE-16	CW	-
650 151 09LS1	5.59 *(90)*	43.6		500 MIN 2300 CONT.	ISO 80MM 4B	DIN 5462	DRAIN: SAE-12	CW	-
650 151 09LS2									VOLUME STOP
650 151 11LS1	6.71 *(110)*	52.3	5400 CONT. 5800 INT.	500 MIN 2200 CONT.	ISO 80MM 4B	DIN 5462	INLET: 50MM FLANGE	CW	-
650 151 11LS2									VOLUME STOP
651 251 11LS1					SAE-C 4B	1 1/4-14T SPLINE	OUTLET: SAE-16	CW	-
651 251 13LS2	7.90 *(130)*	61.8		500 MIN 2100 CONT.	ISO 80MM 4B	DIN 5462	DRAIN: SAE-12	CW	VOLUME STOP
651 251 13LS7								CCW	

SUCCION FITTINGS

MODEL CODE	DESCRIPTION
15511200507	ADAPTS 50MM FLANGE TO 2" ID SUCCION HOSE
15511200632	ADAPTS 50MM FLANGE TO 2 1/2" ID SUCCION HOSE
15611200767	ADAPTS 50MM FLANGE TO 3" ID SUCCION HOSE

HDS BENT AXIS FIXED DISPLACEMENT PUMPS

- BENT AXIS PISTON PUMP FOR TRUCKS
- 4 BOLT SAE B & SAE C MOUNTING
- FROM 0.73 IN (12 CC) TO 7.93 IN (130 CC)
- PRESSURES UP TO 6000 PSI

A10V VARIABLE DISPLACEMENT PUMPS

TECHNICAL SPECIFICATIONS

- SWASHPLATE AXIAL PISTON PUMP
- GOOD SUCTION CHARACTERISTICS
- COMPACT, LIGHTWEIGHT, LOW NOISE
- LONG SERVICE LIFE, HIGH PRECISION BEARINGS
- AXIAL AND RADIAL LOAD CAPACITY

MAXIMUM OPERATING PRESSURE

NOMINAL: 4060 PSI (280 BAR)
INTERMITTENT: 4560 PSI (315 BAR)
PEAK: 5075 PSI (350 BAR)
MAXIMUM CASE DRAIN PRESSURE: 29 PSI (2 BAR)
SUCCION PRESSURE RANGE: 11.6 - 435 PSI (0.8 - 30 BAR) ABSOLUTE

FEATURES

- PRESSURE COMPENSATOR WITH LOAD SENSE CONTROL (DFR)
- VOLUME STOP
- CLOCKWISE ROTATION
- SIDE PORTS WITH CODE 61 FLANGES
- BUNA SEALS

ALSO AVAILABLE

- MANY CONTROLS SUCH AS: REMOTE COMPENSATOR (DRG) AND COMPENSATOR WITH HORSEPOWER LIMITER (DFLR)
- COUNTERCLOCKWISE ROTATION
- END PORTS WITH CODE 61 OR 62 FLANGES
- VITON SEALS
- OTHER MOUNTING FLANGES AND SHAFTS

MODEL CODE	DISPLACEMENT IN^3 *(CM^3)* / REV.	GPM @ 1800 RPM	MAX RPM	MOUNTING FLANGE	SHAFT	PORTS CODE FLANGE 61	DRAIN PORT
A10VS018-DFR-31-R-P-K-C62N00	1.1 *(18)*	8.5	3300	SAE-A 2 BOLT	3/4" KEY	INLET: 1" OUTLET: 3/4"	SAE-06
A10VS018-DFR-31-R-P-S-C62N00					3/4 SPLINE		
A10VS028-DFR-31-R-P-K-C62N00	1.71 *(28)*	13	3000	SAE-B 2 BOLT	7/8" KEY	INLET: 1 1/4" OUTLET: 1"	SAE-08
A10VS028-DFR-31-R-P-S-C62N00					7/8" SPLINE		
A10VS045-DFR-31-R-P-K-C62N00	2.75 *(45)*	21	2600		1" KEY	INLET: 1 1/2" OUTLET: 1"	SAE-10
A10VS045-DFR-31-R-P-S-C62N00					1" SPLINE		
A10VS071-DFR-31-R-P-K-C62N00	4.33 *(71)*	33.5	2200	SAE-C 2 BOLT	1 1/4" KEY	INLET: 2" OUTLET: 1"	
A10VS071-DFR-31-R-P-S-C62N00					1 1/4" SPLINE		
A10VS0100-DFR-31-R-P-K-C62N00	6.10 *(100)*	47	2000		1 1/2" KEY	INLET: 2 1/2"	SAE-12
A10VS0100-DFR-31-R-P-S-C62N00					1 1/2" SPLINE	OUTLET: 1 1/4"	
A10VS0140-DFR-31-R-P-K-C62N00	8.54 *(140)*	66.5	1800	SAE-D 4 BOLT	1 3/4" KEY	INLET: 2 1/2"	
A10VS0140-DFR-31-R-P-S-C62N00					1 3/4" SPLINE	OUTLET: 1 1/4"	

PTO PUMPS

- SLIPS ONTO TRACTOR PTO SHAFT (NO GEARBOX REQUIRED)
- 2000 PSI MAXIMUM PRESSURE
- BARBED ADAPTOR FOR HOSE INCLUDED
- FEMALE PIPE ADAPTOR FOR 3/4 NPT INCLUDED

BAILEY PART NO	MODEL CODE	HP @ 2000 PSI	FLOW @ RPM	FLOW GPM	SHAFT	PORTS SIZE
251560	HC-PTO-1A	32	540	21	1 3/8 - 6 T	INLET SAE-16
251555	HC-PTO-9A	27		17		
251563	HC-PTO-2A	18		11		OUTLET SAE-12
251565	HC-PTO-3A	34	1000	22.5	1 3/8 - 21 T	

GEAR BOX / PUMP ASSEMBLY

- SLIPS ONTO 540 RPM TRACTOR PTO SHAFTS
- ADAPTS TO 1 3/8 - 6T SPLINE SHAFT
- OTHER PUMPS FLOW AVAILABLE UPON REQUEST

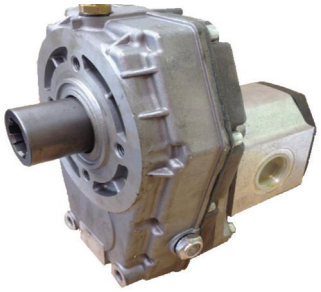

MODEL CODE	HP @ 2000 PSI	GPM @ 540 RPM	MAX PSI	INLET	OUTLET
2.5PB-PTO-F-38D	25.4	19.2	2500	SAE-16	SAE-12
2.5PB-PTO-F-32D	21.4	16.3	3300		
2.5PB-PTO-F-22D	14.7	11	3600		

POWER TAKE-OFF

- NEW COMPLETE LINE ADAPTED TO YOUR NEED
- PTO'S WITH SAE B OUTPUT VERSION NOW AVAILABLE
- COMPATIBLE FOR FOLLOWING TRANSMISSIONS AND MOTORS : EATON, ALLISON, FORD, MACK, VOLVO AND OTHERS
- SEND US YOUR REQUESTS

2 STAGES PUMPS

- IDEAL FOR LOGSPLITTERS
- CLOCKWISE ROTATION
- 3000 PSI MAXIMUM PRESSUREI
- 3600 MAX RPM
- UNLOAD PRESSURE SET TO 650 PSI (400-900 PSI RANGE)
- 1" TUBE INLET

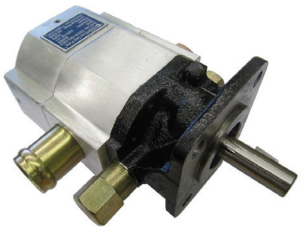

MODEL CODE	GPM @ 3600 RPM HIGH SPEED LOW PRESSURE	GPM @ 3600 RPM LOW SPEED HIGH PRESSURE	SHAFT	MOUNTING FLANGE	OUTLET PORT
CBN-8.8/3.0	11	2.8	1/2 KEY	SAE-AA 4 BOLT	1/2 NPT
CBN-13/4.2	16	4			
CBDN-16/7	22	6	5/8 KEY	SAE-A 2 BOLT	3/4 NPT
CBDN-22/7	28	6			

HYDRO CUSTOM™

BAILEY HYDRAULICS™

HAND PUMPS

- TEMPERATURE -30° + 110° C (NBR)
- PORTS: SAE-06
- OPTIONS : MANUAL RELEASE, RELIEF VALVE, PRESSURE GAUGE

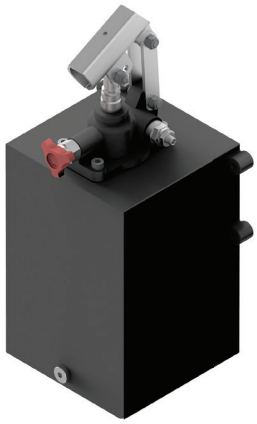

MODEL CODE

EXEMPLE HP 25 S RV 04L H

- HP → PRODUCT TYPE
- 25 → CAPACITY (CC)
- S → RELEASE
  - S = RELEASE FOR SINGLE ACTING
  - D = 4 WAY 2 POSITIONS FOR DUAL ACTING CIRCUTS
- RV → RV = WITH RELIEF
- 04L → TANK SIZE
- H → H = WITH HANDLE

25 CC

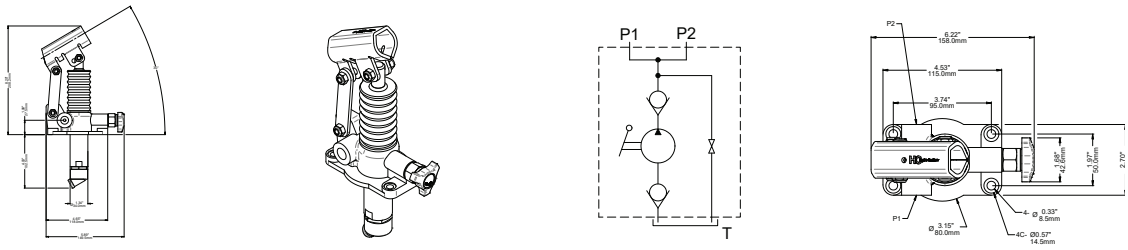

45 CC

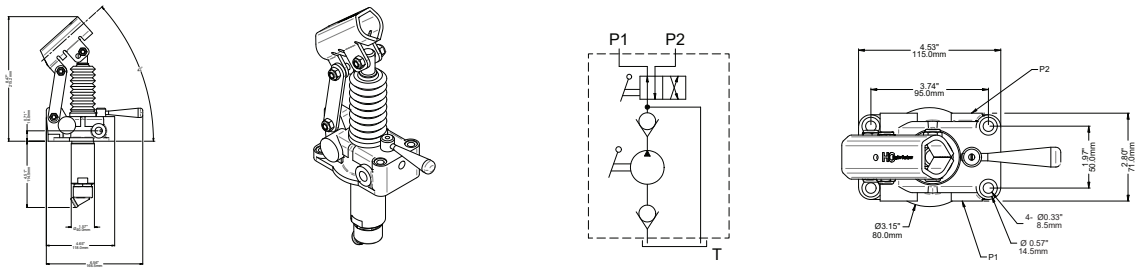

DISPLACEMENT (CC)	MAX PSI	FULL LOAD (CC)	PULL (CC)	PUSH (CC)
25	4351	25	13.4	11.6
45	3916	45	23.7	21.3

CAPACITY (LITER)	DIMENSIONS (MM)		
	A	B	C
1	150	100	120
1.5	150	100	120
2	150	100	185
3	150	100	255
5	175	175	200
7	175	175	275
10	175	175	380
16	230	230	350

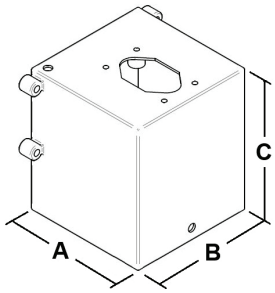

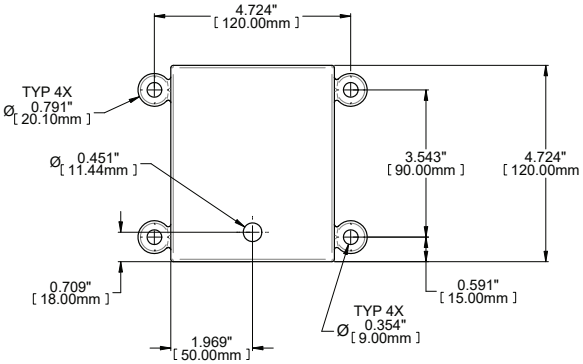

TPV 1100 VARIABLE DISPLACEMENT CLOSED LOOP SYSTEM AXIAL PISTON PUMPS

FEATURES:
- COMPACT DESIGN
- SUITABLE FOR MULTIPLE PUMP ASSEMBLY
- SAE A OR SAE B FLANGE
- SPLINE AND KEYED SHAFTS AVAILABLE
- BUILT-IN PRESSURE RELIEF VALVES
- INTEGRATED CHARGE PUMP

CONTROLS AVAILABLE:
- DIRECT MECHANICAL CONTROL, LEVER OR NOT
- CONTROL LEVER WITH SPRING RETURN TO NEUTRAL
- INTEGRATED HYDRAULIC SERVO CONTROL
- INTEGRATED ELECTRO-PROPORTIONAL SERVO CONTROL

OPTIONS:
- AUXILIARY GEAR PUMP
- LEVER BY-PASS
- FLUSHING VALVE
- LEVERY BY-PASS + PURGE VALVE
- SCREW BY-PASS

DISPLACEMENT IN³ (CM³) / REV.	RATED PRESSURE PSI	PEAK PRESSURE PSI	RATED SPEED RPM	WEIGHT LB *(KG)*
0.45 (7.4)	*4350*	*5075*	3600	24 *(11)*
0.54 ***(8.9)***				
0.59 ***(9.6)***				
0.68 ***(11.2)***				
0.78 ***(12.8)***				
0.83 ***(13.6)***				
0.91 ***(15.0)***	*3625*	*4350*		
1.04 ***(17.1)***				
1.11 ***(18.2)***				
1.18 ***(19.4)***	*3190*	*4060*	2900	
1.29 ***(21.1)***				

TPV 1300 TANDEM PUMPS

- BASICALLY SAME TPV 1100 SPECIFICATIONS
- VERY COMPACT (BACK TO BACK PUMPS CONFIGURATION)

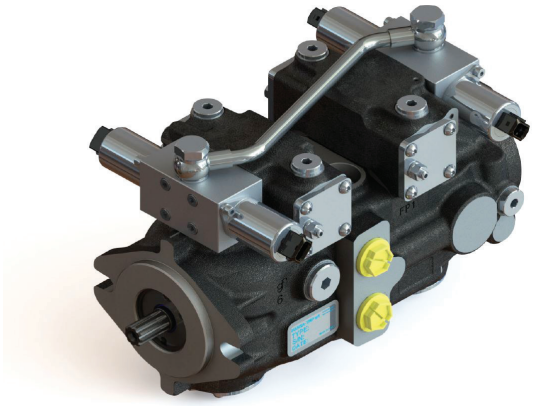

TPV 1500 VARIABLE DISPLACEMENT CLOSED LOOP SYSTEM AXIAL PISTON PUMP

FEATURES:
- COMPACT DESIGN
- HIGH POWER DENSITY
- SUITABLE FOR MULTIPLE PUMP ASSEMBLY
- SAE B MOUNT WITH 13T SPLINE SHAFT
- BUILT-IN PRESSURE RELIEF VALVES
- LOW NOISE INTEGRATED CHARGE PUMP

CONTROLS AVAILABLE:
- HYDRAULIC SERVO CONTROL
- ELECTRO-PROPORTIONAL SERVO CONTROL
- MECHANICAL LEVER SERVO CONTROL WITH FEEDBACK

OPTIONS:
- FEEDBACK ON CONTROLS
- PRE-ARRANGED FOR CONNECTION WITH EXTERNAL FILTER
- INTEGRATED FILTER WITH OR WITHOUT CLOGGING INDICATOR
- AUXILIARY GEAR PUMP
- FLUSHING VALVE WITH SCREW BY-PASS
- MAN ON BOARD
- SENSORS FOR RPM, ANGLE, PRESSURE

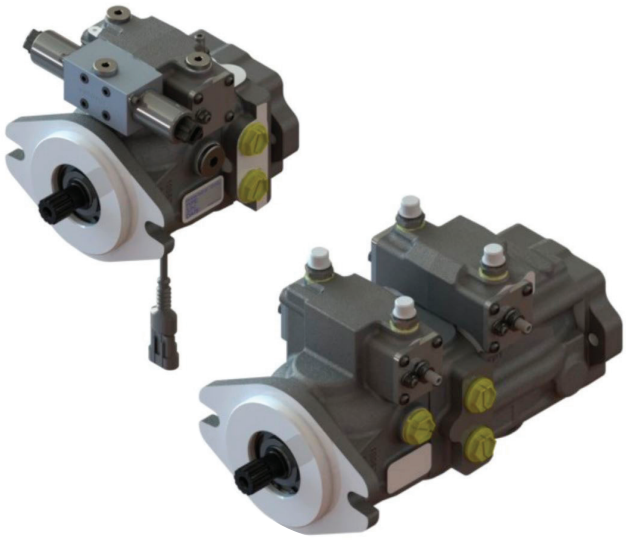

DISPLACEMENT IN³ (CM³) / REV.	RATED PRESSURE PSI	PEAK PRESSURE PSI	RATED SPEED RPM	WEIGHT LB *(KG)*
1.07 ***(17.6)***	*4350*	*5075*	3600	31 *(14)*
1.14 ***(18.7)***				
1.21 ***(19.9)***				
1.29 ***(21.1)***				
1.38 ***(22.7)***	*4060*	*4625*		
1.46 ***(24.0)***				

TPV 3600 VARIABLE DISPLACEMENT CLOSED LOOP SYSTEM AXIAL PISTON PUMPS

FEATURES:
- COMPACT DESIGN
- SUITABLE FOR MULTIPLE PUMP ASSEMBLY
- SAE B MOUNT WITH 13T OR 15T SPLINE SHAFT
- BUILT-IN PRESSURE RELIEF VALVES
- LOW NOISE INTEGRATED CHARGE PUMP

CONTROLS AVAILABLE:
- HYDRAULIC SERVO CONTROL
- ELECTRO-PROPORTIONAL SERVO CONTROL
- MECHANICAL LEVER SERVO CONTROL WITH FEEDBACK

OPTIONS:
- AUXILIARY GEAR PUMP
- FEEDBACK ON CONTROLS
- PRE-ARRANGED FOR CONNECTION WITH EXTERNAL FILTER
- INTEGRATED FILTER WITH OR WITHOUT CLOGGING INDICATOR
- FLUSHING VALVE WITH SCREW BY-PASS
- MAN ON BOARD
- SENSORS FOR RPM, ANGLE, PRESSURE

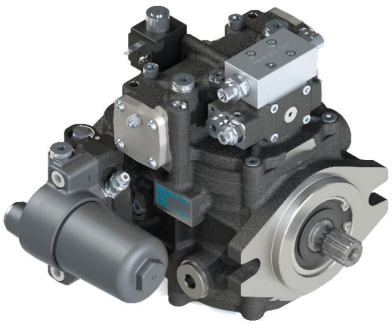

DISPLACEMENT IN³ (CM³) / REV.	RATED PRESSURE PSI	PEAK PRESSURE PSI	RATED SPEED RPM	WEIGHT LB *(KG)*
1.6 *(26)*	*5800*	*6100*	3600	57 *(28)*
1.7 *(28)*				
1.8 *(30)*				
1.9 *(31)*				
2.0 *(32)*				
2.1 *(34)*				
2.2 *(36)*				
2.3 *(38)*				
2.6 *(43)*				

TPV 4300 VARIABLE DISPLACEMENT CLOSED LOOP SYSTEM AXIAL PISTON PUMPS

FEATURES:
- COMPACT DESIGN
- SUITABLE FOR MULTIPLE PUMP ASSEMBLY
- SAE B MOUNT WITH 13T OR 15T SPLINE SHAFT
- BUILT-IN PRESSURE RELIEF VALVES
- LOW NOISE INTEGRATED CHARGE PUMP

CONTROLS AVAILABLE:
- HYDRAULIC SERVO CONTROL
- ELECTRO-PROPORTIONAL SERVO CONTROL
- ELECTRIC ON-OFF SERVO CONTROL
- MECHANICAL LEVER SERVO CONTROL WITH FEEDBACK

OPTIONS:
- AUXILIARY GEAR PUMP
- FEEDBACK ON CONTROLS
- PRE-ARRANGED FOR CONNECTION WITH EXTERNAL FILTER
- SCREW BY-PASS
- MAN ON BOARD
- PRESSURE CUT-OFF VALVE

DISPLACEMENT IN³ (CM³) / REV.	RATED PRESSURE PSI	PEAK PRESSURE PSI	RATED SPEED RPM	WEIGHT LB *(KG)*
2.0 *(32)*	*4060*	*4625*	3600	53 *(24)*
2.3 *(38)*				
2.7 *(45)*				
3.1 *(50)*				

TPV 5000 VARIABLE DISPLACEMENT CLOSED LOOP SYSTEM AXIAL PISTON PUMPS

FEATURES:
- COMPACT DESIGN
- SUITABLE FOR MULTIPLE PUMP ASSEMBLY
- SAE B MOUNT WITH 13T OR 15T SPLINE SHAFT
- BUILT-IN PRESSURE RELIEF VALVES

CONTROLS AVAILABLE:
- AUTOMOTIVE
- HYDRAULIC PROPORTIONAL
- ELECTRIC 2 POSITION ON-OFF
- ELECTRIC IMPULSE
- ELECTRO-PROPORTIONAL
- MECHANICAL LEVER SERVO CONTROL WITH FEEDBACK

OPTIONS:
- AUXILIARY GEAR PUMP
- FEEDBACK ON CONTROLS
- POWER LIMITER
- PRESSURE FILTER
- PRE-ARRANGED FOR CONNECTION WITH EXTERNAL FILTER
- INTEGRATED FILTER WITH OR WITHOUT CLOGGING INDICATOR
- ELECTRIC CUT-OFF VALVE
- HYDRAULIC AND MECHANICAL INCHING

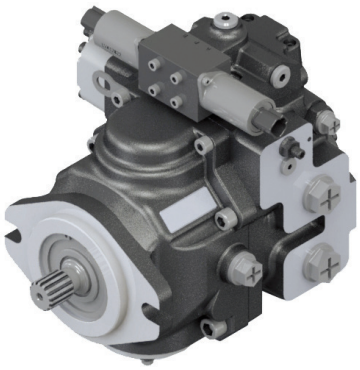

DISPLACEMENT IN³ (CM³) / REV.	RATED PRESSURE PSI	PEAK PRESSURE PSI	RATED SPEED RPM	WEIGHT LB *(KG)*
2.8 ***(46)***	*4350*	*5800*	3600	64 *(29)*
3.1 ***(50)***				
3.9 ***(64)***				

JAW COUPLERS

- Material: Steel, Black Phosphate
- Sold as individual pieces - Spiders sold separately

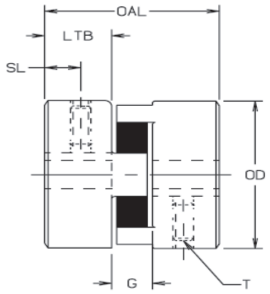

BAILEY PART NO	MODEL CODE	SHAFT DIAMETER	KEYWAY	SERIES
235101	L075-7/16	7/16	3/32	L070
235103	L075-1/2	1/2	1/8	
235106	L075-5/8M	5/8	3/16	
235105	L075-5/8P	5/8	5/32	
235107	L075-3/4	3/4	3/16	
235108	L075-7/8M	7/8	3/16	
235109	L090-7/16	7/16	3/32	L090
235111	L090-1/2	1/2	1/8	
235113	L090-5/8M	5/8	3/16	
235112	L090-5/8P	5/8	5/32	
235115	L090-3/4	3/4	3/16	
235116	L090-7/8M	7/8	3/16	
235117	L090-1	1	1/4	
235119	L095-1/2	1/2	1/8	L095
235121	L095-5/8M	5/8	3/16	
235122	L095-5/8P	5/8	5/32	
235123	L095-3/4	3/4	3/16	
235137	L095-7/8M	7/8	3/16	
235125	L095-1	1	1/4	
235124	L095-1-1/8	1 1/8	1/4	
235126	L100-1/2	1/2	1/8	L100
235127	L100-5/8M	5/8	3/16	
235128	L100-5/8P	5/8	5/32	
235129	L100-3/4	3/4	3/16	
235132	L100-7/8M	7/8	3/16	
235130	L100-7/8P	7/8	1/4	
235131	L100-1	1	1/4	
235133	L100-1-1/8	1 1/8	1/4	
235134	L100-1-1/4M	1 1/4	1/4	
235138	L100-1-1/4P	1 1/4	5/16	
235135	L100-1-3/8	1 3/8	5/16	
235144	L110-3/4	3/4	3/16	L110
235145	L110-7/8M	7/8	3/16	
235141	L110-7/8P	7/8	1/4	
235146	L110-1	1	1/4	
235147	L110-1-1/8	1 1/8	1/4	
235150	L110-1-1/4M	1 1/4	1/4	
235148	L110-1-3/8	1 3/8	5/16	
235143	L110-1-1/2	1 1/2	3/8	
235142	L110-1-5/8	1 5/8	3/8	
235159	L150-7/8M	7/8	3/16	L150
235160	L150-7/8P	7/8	1/4	
235161	L150-1	1	1/4	
235177	L150-1-1/4M	1 1/4	1/4	
235179	L150-1-3/8	1 3/8	5/16	
235155	L150-1-1/2	1 1/2	3/8	
235157	L150-1-5/8	1 5/8	3/8	
235156	L150-1-3/4	1 3/4	3/8	
235169	L150-1-7/8	1 7/8	1/2	

SERIES	DIMENSIONS (IN)				WEIGHT (LBS)
	OD	OAL	G	LTB	
L075	1.75	2.13	0.5	0.82	1.0
L090	2.11	2.15	0.52	0.82	1.5
L095	2.11	2.51	0.52	1.00	1.8
L100	2.54	3.48	0.71	1.38	3.2
L110	3.32	4.22	0.88	1.68	6.6
L150	3.75	4.50	1.00	1.75	8.8

SPIDERS

- MATERIAL : NITRILE
- URETHANE AND HYTREL ALSO AVAILABLE

BAILEY PART NO	MODEL CODE	USE WITH SERIES	TORQUE (IN•LB)
236075	L075N	L075	90
236090	L095N	L090	144
		L095	194
236100	L100N	L100	417
236110	L110N	L110	792
236150	L150N	L150	1240

USEFUL INFORMATION

GAS ENGINES - TORQUE

CALCULATED AT 3600 RPM

HP	TORQUE (IN•LB)	SHAFT DIAMETER	KEYWAY	LENGTH (IN)
5.5	100	3/4	3/16	2.42
6.5	118			
8	146	1	1/4	3.48
9	164			
11	200			
13	237			

ELECTRIC MOTORS - TORQUE

CALCULATED AT 1800 RPM

HP	FRAME	TORQUE (LB-IN)	SHAFT DIAMETER	KEYWAY	LENGTH (IN)
1/3	56C	11	5/8	3/16	1.88
1/2	56C	17			
3/4	56C	26			
1	56C	35	5/8	3/16	1.88
	143TC		7/8		2.25
1 1/2	56C	52	5/8	3/16	1.88
	145TC		7/8		2.25
2	56C	70	5/8	3/16	1.88
	145TC		7/8		2.25
3	182TC	105	1 1/8	1/4	2.75
5	184TC	175			
7 1/2	213TC	262	1 3/8	5/16	3.38
10	215TC	350			
15	254TC	525	1 5/8	3/8	4.00
20	256TC	700			
25	284TC	875	1 7/8	1/2	4.63
30	286TC	1050			

PUMP SHAFTS - DIMENSIONS

SHAFT TYPE	SHAFT DIAMETER	KEYWAY	LENGTH (IN)
SAE-AA 4 BOLT	1/2	1/8	1.50
SAE-AA 2 BOLT	1/2	1/8	1.06
SAE-A	5/8	3/16	1.25
SAE-A	5/8	5/32	1.25
SAE-A	3/4	3/16	1.25
SAE-B	7/8	1/4	1.61
SAE-BB	1	1/4	1.81

JAW COUPLERS - LH SERIE

- Shortened overall length for easy replacement
- Superior torque capacity
- Fail-safe performs even if elastomer fails
- No metal to metal contact

BAILEY PART NO	MODEL CODE	SHAFT DIAMETER	KEYWAY	SERIES
235300	LH100-1/2	1/2	1/8	LH100
235301	LH100-5/8M	5/8	3/16	
235302	LH100-5/8P	5/8	5/32	
235303	LH100-3/4	3/4	3/16	
235304	LH100-7/8M	7/8	3/16	
235328	LH100-7/8P	7/8	1/4	
235319	LH100-1	1	1/4	
235305	LH100-1-1/8	1 1/8	1/4	
235311	LH200-5/8M	5/8	3/16	LH200
235312	LH200-5/8P	5/8	5/32	
235313	LH200-3/4	3/4	3/16	
235314	LH200-7/8M	7/8	3/16	
235315	LH200-7/8P	7/8	1/4	
235348	LH200-1	1	1/4	
235316	LH200-1-1/8	1 1/8	1/4	
235317	LH200-1-3/8	1 3/8	5/16	
235320	LH300-5/8M	5/8	3/16	LH300
235321	LH300-5/8P	5/8	5/32	
235322	LH300-3/4	3/4	3/16	
235323	LH300-7/8M	7/8	3/16	
235329	LH300-7/8P	7/8	1/4	
235324	LH300-1-1/8	1 1/8	1/4	
235326	LH300-1-3/8	1 3/8	5/16	
235327	LH300-1-5/8	1 5/8	3/8	
235330	LH400-7/8P	7/8	1/4	LH400
235331	LH400-1	1	1/4	
235332	LH400-1-3/8	1 3/8	5/16	
235333	LH400-1-5/8	1 5/8	3/8	
235335	LH400-1-7/8	1 7/8	1/2	

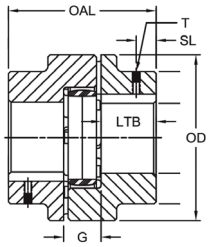

SERIES	DIMENSIONS (IN)				WEIGHT (LBS)
	OD	OAL	G	LTB	
LH100	2.56	2.54	0.79	0.88	0.9
LH200	3.15	3.10	0.94	1.08	1.8
LH300	3.74	3.56	1.02	1.27	2.9
LH400	4.13	4.24	1.10	1.57	3.6

SPIDERS - LH SERIE

- Material: Urethane 92U (Yellow)

BAILEY PART NO	MODEL CODE	USE WITH SERIES	TORQUE (IN•LB)
236500	LH100Y	LH100	665
236505	LH200Y	LH200	1650
236510	LH300Y	LH300	2345
236515	LH300Y	LH400	2740

BELL HOUSINGS FOR ELECTRIC MOTORS

BAILEY PART NO	MODEL CODE	MOTOR FRAME	PUMP FLANGE	FACE TO FACE (IN)	MAXIMUM COUPLING DIA. (IN)	WEIGHT (LBS
202192	B564F44	56-145TC	4F17 - 1.781" 4 BOLT	4.40	3.0	1.8
202161	B56AA42		SAE AA - 2" 2 BOLT	4.25	3.5	3.0
202191	B56A35		SAE A - 3 1/4" 2 BOLT	3.50	3.0	1.8
202182	B56A42			4.25	3.5	3.0
202195	B182A51	182-256TC	SAE A - 3 1/4" 2 BOLT	5.12	3.5	2.9
202194	B182A58			5.81	3.5	3.4
202201	B182A68			6.81	3.5	4.0
202174	B182B58		SAE-B - 4" 2 BOLT	5.81	4.0	5.1
202159	B182B68			6.81	4.0	5.5
202160	B284B69	284-286TC	SAE-B - 4" 2/4 BOLT	6.87	4.5	8.1

BELL HOUSINGS FOR GAS ENGINES

BAILEY PART NO	MODEL CODE	GAS ENGINE SIZES	PUMP FLANGE	FACE TO FACE (IN)	MAXIMUM COUPLING DIA. (IN)	WEIGHT (LBS)
202005	ADAP55-175	5.5-6.5 HP *(3.63" BOLT CIRCLE)*	4F17 - 1.781" 4 BOLT	4.44	2.5	1.2
202233	BG36AA44		SAE-AA - 2" 2 BOLT	4.44	2.5	1.4
202006	ADAP55-325		SAE-A - 3 1/4" 2 BOLT	4.69		
202008	ADAP90200-175	8-20 HP *(6.5" BOLT CIRCLE, 5.75" PILOT)*	4F17 - 1.781" 4 BOLT	5.63	3.0	3.0
202038	ADAP90200-L-175			6.00	3.25	4.3
202047	ADAP90200-200		SAE-AA - 2" 2 BOLT	5.63	3.0	3.0
202167	ADAP90200-325		SAE-A - 3 1/4" 2 BOLT	5.50	3.25	4.3
202013	ADAP90200-L-325			6.00		

FOOT MOUNT FOR PUMPS AND MOTORS

BAILEY PART NO	MODEL CODE	PUMP FLANGE	BASE TO CENTER (IN)	WEIGHT (LBS)
202196	FM-4F17	4F17 - 1.781" 4 BOLT	3.44	0.9
202197	FM-A2	SAE-A - 3 1/4" 2 BOLT	3.44	1.7
202198	FM-B2	SAE-B - 4" 2 BOLT	5.25	2.8

BM20
SPOOL : 1-7
FLOW : 5.2 GPM
MAX PRESSURE : 4700 PSI P.78

BF40
SPOOL : 1-6
FLOW : 10.5 GPM
MAX PRESSURE : 4700 PSI P.82

MB2
SPOOL : 1
FLOW : 12 GPM
MAX PRESSURE : 3600 PSI P.78

MB3
SPOOL : 2-7
FLOW : 12 GPM
MAX PRESSURE : 4600 PSI P.78

VDM6A
SPOOL : 1-7
FLOW : 12 GPM
MAX PRESSURE : 5400 PSI P.80

VDM6
FLOW : 15 GPM
MAX PRESSURE : 5000 PSI P.79

MB4
SPOOL : 1-6
FLOW : 16 GPM
MAX PRESSURE : 4600 PSI P.80

BF70
SPOOL : 1-6
FLOW : 18.5 GPM
MAX PRESSURE : 4700 PSI P.82

RD500 & RD2500
SPOOL : 1-3
FLOW : 20 GPM
MAX PRESSURE : 3000 PSI P81

MB5
SPOOL : 1-6
FLOW : 21 GPM
MAX PRESSURE : 4600 PSI P.80

BF90
SPOOL : 1
FLOW : 24 GPM
MAX PRESSURE : 4700 PSI P.82

VDM8
SPOOL : 1-5
FLOW : 24 GPM
MAX PRESSURE : 5000 PSI P.82

BM100
SPOOL : 1-3
FLOW : 26 GPM
MAX PRESSURE : 4700 PSI P.83

BM150/180
SPOOL : 1
FLOW : 40 / 48 GPM
MAX PRESSURE : 4700 PSI P.83

TIPPING VALVES
FLOW : MODULAR 150/200/250
MAX PRESSURE : 5800 PSI P.83

BM20 MANUAL VALVES

- ZINC COATED
- DOUBLE ACTING SPOOL, SPRING RETURN WITH LEVERS
- OPEN/CLOSED CENTER, POWER BEYOND OPTION
- HANDLES INCLUDED
- RELIEF SET TO 2550 PSI

MODEL CODE	NB OF SPOOL	GPM MAX	PSI MAX	PORT SIZE
902457	1	5.2	4700	P, T, A, B: SAE-06 P2 & T2: SAE-08
902458	2			
902459	3			
90211008	4			
90211009	5			
90211010	6			
90211011	7			

MB2 MANUAL VALVES

- BLACK PAINTED
- DOUBLE ACTING SPOOL, SPRING RETURN WITH LEVERS
- HANDLES INCLUDED
- RELIEF SET TO 2550 PSI
- OPEN CENTER ONLY, NO POWER BEYOND

MODEL CODE	NB OF SPOOL	GPM MAX	PSI MAX	PORT SIZE
MB2/1S-3/18L/E8-M1	1	12	3600	SAE-08

FITS "SD4"
WALVOIL FOOTPRINT

MB3 MANUAL VALVES

- BLACK PAINTED
- DOUBLE ACTING SPOOL, SPRING RETURN WITH LEVERS
- OPEN/CLOSED CENTER. POWER BEYOND OPTION
- HANDLES INCLUDED
- RELIEF SET TO 2550 PSI

MODEL CODE	NB OF SPOOL	MAX GPM	MAX PSI	PORT SIZE
MB3/1S-3/18L/E8-M3	1	12	4600	SAE-08
MB3/2S-3/18L/E8-M3	2			
MB3/3S-3/18L/E8-M3	3			
MB3/4S-3/18L/E8-M3	4			
MB3/5S-3/18L/E8-M3	5			
MB3/6S-3/18L/E8-M3	6			
MB3/7S-3/18L/E8-M3	7			

ALSO AVAILABLE

- MOTOR AND SINGLE ACTING SPOOLS
- 2 AXIS JOYSTICK
- DETENT, FLOAT CONTROL
- ELECTRIC, AIR & CABLE CONTROLS
- LIMIT SWITCH

FITS "SD5"
WALVOIL FOOTPRINT

VDM6 MANUAL VALVES

- ZINC COATED
- DOUBLE ACTING SPOOL, SPRING RETURN WITH LEVERS
- OPEN / CLOSED CENTER, POWER BEYOND OPTION
- HANDLES INCLUDED
- RELIEF SET AT 2550 PSI
- VERY GOOD METERING
- MINIMAL TOLERANCE BETWEEN PARTS FOR MINIMUM INTERNAL LEAKAGE
- SEVERAL TYPE OF SPOOLS AND CONTROLS

623100131

MODEL CODE	NB OF SPOOL	MAX GPM	MAX PSI	PORT SIZE
623100111	1	15	5000	P, A & B: SAE-08 T: SAE-10
623100121	2			
623100131	3			
623100141	4			
623100151	5			
623100161	6			
623105501	7			

OTHER POPULAR VALVES

MODEL CODE	DESCRIPTION
623108010	1 D.A. SPOOL, 12VDC WITH LEVERS
623106980	2 D.A. SPOOLS, 12VDC WITH LEVERS
623106330	1 D.A. DETENT KICK-OUT SPOOL, 1 S.A SPOOL
623103870	1 FLOATING + 1 D.A. SPOOL C/W JOYSTICK
623108191	7 SPOOL D.A C/W 2 JOYSTICKS SAE-06 ON A & B PORTS

623108191

POPULAR PARTS

MODEL CODE	DESCRIPTION
R23400320	DETENT KIT IN & OUT
R23400210	SPOOL SEAL KIT (PER SPOOL)
R23400221	SPRING RETURN KIT
R23400060	LEVER BOX
795428901	POWER BEYOND & CLOSE CENTER PLUG

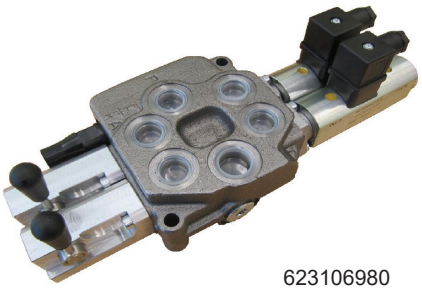

623106980

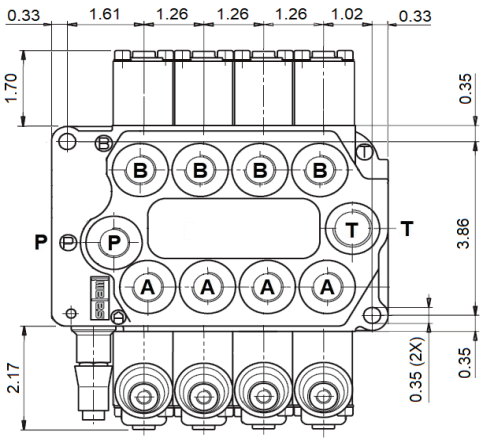

VDM6A MANUAL VALVES

- LOADCHECK ON EVERY SECTION
- POSSIBILITY FOR PORT RELIEFS
- DOUBLE ACTING SPOOL, SPRING RETURN WITH LEVERS
- OPEN/CLOSED CENTER. POWER BEYOND OPTION
- HANDLES INCLUDED
- RELIEF SET TO 2550 PSI

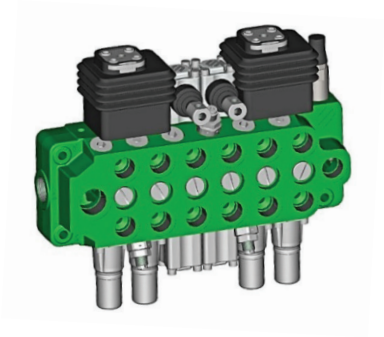

MODEL CODE	NB OF SPOOLS	MAX GPM	MAX PSI	PORT SIZE
625033600	2	12	5400	P, A & B: SAE-08 T: SAE-10
625033700	3			
625033800	4			
625034100	5			
625034200	6			
625034300	7			

MB4 MANUAL VALVES

- BLACK PAINTED
- DOUBLE ACTING SPOOL, SPRING RETURN WITH LEVERS
- OPEN/CLOSED CENTER. POWER BEYOND OPTION
- HANDLES INCLUDED
- RELIEF SET TO 2550 PSI
- MANY OPTIONS AVAILABLE

FITS "HCD10" HYDROCONTROL FOOTPRINT

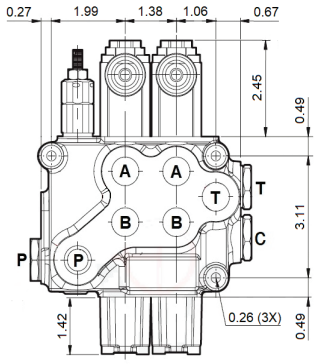

MODEL CODE	NB OF SPOOLS	MAX GPM	MAX PSI	PORT SIZE
MB4/1S-3/18L/E8-M3	1	16	4600	SAE-08
MB4/2S-3/18L/E8-M3	2			
MB4/3S-3/18L/E8-M3	3			
MB4/4S-3/18L/E8-M3	4			
MB4/5S-3/18L/E8-M3	5			

MB5 MANUAL VALVES

- BLACK PAINTED
- DOUBLE ACTING SPOOL, SPRING RETURN WITH LEVERS
- OPEN/CLOSED CENTER. POWER BEYOND OPTION
- HANDLES INCLUDED
- RELIEF SET TO 2550 PSI
- MANY OPTIONS AVAILABLE

FITS "SD11" WALVOIL FOOTPRINT

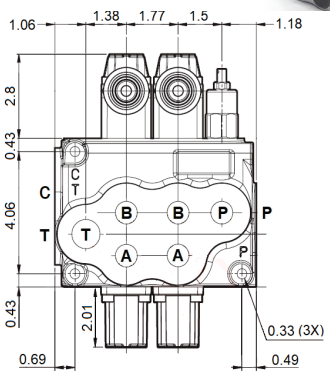

MODEL CODE	NB OF SPOOLS	MAX GPM	MAX PSI	PORT SIZE
MB5/1S-3/18L/E8-M3	1	21	4600	P&T:SAE-12 A&B:SAE-10
MB5/2S-3/18L/E8-M3	2			
MB5/3S-3/18L/E8-M3	3			
MB5/4S-3/18L/E8-M3	4			
MB5/5S-3/18L/E8-M3	5			
MB5/6S-3/18L/E8-M3	6			

RD2500 & RD500 MANUAL VALVES - PRINCE

- 3000 PSI MAX PRESSURE
- DOUBLE ACTING SPOOLS
- LEVER BOX INCLUDED
- ADJUSTABLE RELIEF 1000-3000 PSI (SET TO 1500 PSI)

BAILEY PART NO	MODEL CODE	NB. OF SPOOLS	MAX GPM	PORT SIZE	DESCRIPTION	PARKER EQUIVALENT	WEIGHT (LBS)
220113	RD2575-T4-ESA1	1	20	P&T: 3/4 NPT A&B: 1/2 NPT	SPRING RETURN	400	9
220109	RD2575-T4-EDA1				3 POSITION DETENT	410	
220110	RD512CA5A4B1	1	30		SPRING RETURN	SP-4-HP	15
220522	RD522CCAA5A4B1	2				SP-4-4-HP	24
220532	RD532CCCAAA5A4B1	3				SP-4-4-4-HP	37

LOG SPLITTER VALVES - PRINCE

- DOUBLE ACTING SPOOLS
- LEVER BOX INCLUDED
- ADJUSTABLE RELIEF UP TO 2750 PSI (SET TO 2250 PSI)
- PRESSURE RELEASE DETENT ADJUSTABLE FROM 1000-2000 PSI

LS-3000

BAILEY PART NO	MODEL CODE	NB. OF SPOOLS	MAX GPM	PSI MAX	PORT SIZE	DESCRIPTION	WEIGHT (LBS)
220092	LS-3000-1	1	25	2750	P&T: 3/4 NPT A&B: 1/2 NPT	PRESSURE RELEASE DETENT, SPOOL OUT POSITION	10
220093	LS-3000-2				3/4 NPT		
220090	LSR-3060-3				P&T: 3/4 NPT A&B: 1/2 NPT	HIGH SPEED EXTENSTION (REGEN) PRESSURE RELEASE DETENT, SPOOL OUT POSITION	
	RD525MMEE5A4B1	2	30	3000	P&T: SAE-12 A&B: SAE-10	AUTO-CYCLE C/W POWER BEYOND	23

LOG SPLITTER VALVES - CHIEF

- DOUBLE ACTING SPOOLS
- LEVER BOX INCLUDED

LSV18N MODEL

- ADJUSTABLE RELIEF 1000-3000 PSI (SET TO 1800 PSI)
- NON ADJUSTABLE PRESSURE RELEASE DETENT SET TO 800 PSI

LSV25N MODEL

- ADJUSTABLE RELIEF 1000-2750 PSI (SET TO 2250 PSI)
- PRESSURE RELEASE DETENT ADJUSTABLE FROM 1000-2600 PSI (SET TO 1400 PSI)

LSV18N

LSV25N

BAILEY PART NO	MODEL CODE	NB. OF SPOOLS	MAX GPM	PSI MAX	PORT SIZE	DESCRIPTION	WEIGHT (LBS)
220997	LSV18N	1	18	3000	P&T: 3/4 NPT A&B: 1/2 NPT	PRESSURE RELEASE DETENT, SPOOL OUT POSITION	5
220998	LSV25N		25	2750			10

VDM8 MANUAL VALVES

- LOADCHECK ON EVERY SECTION
- DOUBLE ACTING SPOOL, SPRING RETURN WITH LEVERS
- OPEN/CLOSED CENTER. POWER BEYOND OPTION
- HANDLES INCLUDED
- RELIEF SET TO 2550 PSI

MODEL CODE	NB OF SPOOLS	MAX GPM	MAX PSI	PORT SIZE
623200110	1	24	5000	P, A & B: SAE-10 T: SAE-12
623200120	2			
623200130	3			
623200140	4			
623200150	5			

POPULAR PARTS

MODEL CODE	DESCRIPTION
R23500300	DETENT KIT IN & OUT
R20272590	SPOOL SEALKIT (PER SPOOL)
R23575070	SPRING RETURN KIT
R20287910	LEVERBOX
795428901	POWER BEYOND / CLOSED CENTER VALVE (FOR 1 SPOOL VALVE)
795429300	POWER BEYOND / CLOSED CENTER FOR 2 TO 5 SPOOLS VALVE

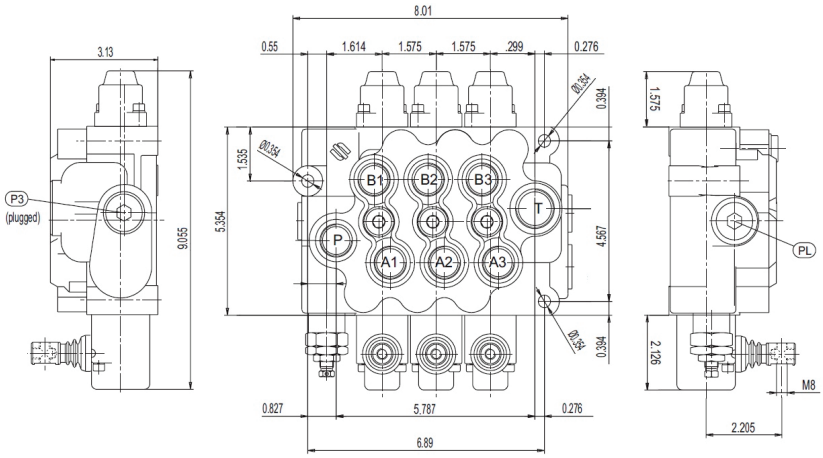

BF40, BF70 & BF90 MANUAL VALVES

- INTEGRATED PRESSURE COMPENSATED FLOW CONTROL (SEND EXCESS FLOW TO TANK)
- ZINC COATED
- DOUBLE ACTING SPOOL, SPRING RETURN WITH LEVERS
- OPEN/CLOSED CENTER. POWER BEYOND OPTION
- HANDLES INCLUDED
- RELIEF SET TO 2550 PSI

MODEL CODE	NB OF SPOOLS	MAX GPM	MAX PSI	PORT SIZE
91411013	1	10.5	4700	SAE-08
914394	2			
91411014	3			
91411015	4			
91411016	5			
91411017	6			
93811005	1	18.5	4700	P, A & B: SAE-10 T: SAE 12
93811006	2			
93811007	3			
93811008	4			
93811009	5			
93011007	1	24	4700	SAE-10

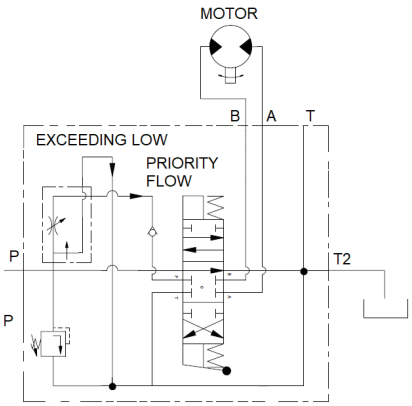

BM100 MANUAL VALVES

- ZINC COATED
- DOUBLE ACTING SPOOL, SPRING RETURN WITH LEVERS
- OPEN/CLOSED CENTER. POWER BEYOND OPTION
- HANDLES INCLUDED
- RELIEF SET TO 2550 PSI

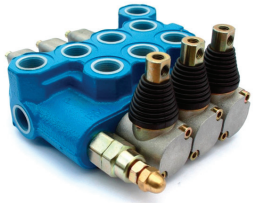

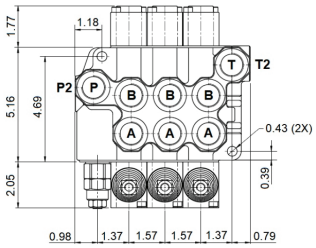

MODEL CODE	NB OF SPOOLS	MAX GPM	MAX PSI	PORT SIZE
93011006	1	26	3600	SAE-12
93011008	2			
93011009	3			

BM150/180 MANUAL VALVES

- 1 SPOOL VALVE
- ZINC COATED
- DOUBLE ACTING SPOOL, SPRING RETURN WITH LEVERS
- OPEN/CLOSED CENTER. POWER BEYOND OPTION
- HANDLES INCLUDED
- RELIEF SET TO 2550 PSI
- SPECIALLY DESIGNED FOR WINCHES
- AVAILABLE WITH ROTARY LEVERS

MODEL CODE	MAX GPM	MAX PSI	PORT SIZE	ROTARY LEVER
92511004	40	4700	P, T, A & B : SAE-12 P2 & T2 : SAE-16	X
925164				□
925603	48		SAE-16	X
925604				□

MODULAR 150/200/250 TIPPING VALVES

- GALVANIZED BODY AND NICKEL SPOOL
- BUILT-IN CHECK AND ADJUSTABLE SAFETY VALVES (DIRECT TYPE)
- MECHANICAL DIRECT END-OF-STROKE WITH ANTI-SHOCK SPRING
- MODULAR CAST-IRON BODY FOR PRESSURE UP TO 5801 PSI

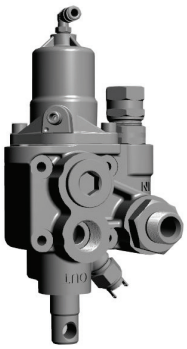

MODEL CODE	NB OF SPOOLS	MAX GPM	MAX PSI	PORT SIZE
121-008-50372	1	40	5800	SAE-12
121-922-00517	1	66	5800	SAE-16

DM250 TIPPING VALVE

- MODULAR CAST-IRON BODY FOR PRESSURE UP TO 5801 PSI
- GALVANIZED BODY AND NICKEL SPOOL

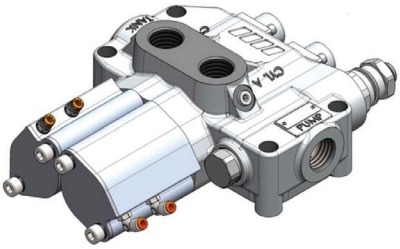

MODEL CODE	NB OF SPOOLS	MAX GPM	MAX PSI	PORT SIZE
121-015-00104	1	66	5800	SAE-12

DIRECTIONAL VALVES - SECTIONAL

VD6A MANUAL VALVES

- VERY GOOD METERING
- MINIMAL TOLERANCE BETWEEN PARTS FOR MINIMUM INTERNAL LEAKAGE
- PARALLEL CIRCUIT (SERIE AND TANDEM SECTIONS AVAILABLE)
- LOAD CHECK ON EACH SECTION
- SEVERAL TYPE OF SPOOLS AND CONTROLS
- POSSIBILY TO ADD PORT RELIEF WITH OR WITHOUT ANTI-CAVITATION
- HANDLES INCLUDED
- WE CAN ASSEMBLE AND CUSTOMIZE FOR YOU

MODEL CODE	SECTIONS	MAX GPM	MAX PSI	PORT SIZE
VD6A	1 - 8	16	5000	P & T: SAE-10 A & B: SAE-08

COMPONENTS

MODEL CODE	TYPE	DESCRIPTION
R23470090	INLET	RELIEF SET TO 2750 PSI
S23480070	SECTION	DOUBLE ACTING, SPRING RETURN, LEVER
S23480550		MOTOR, SPRING RETURN, LEVER
S23480820		SINGLE ACTING PORT A, SPRING RETURN, LEVER
S23480270		4TH POSITION FLOAT, SPRING RETURN, LEVER
S23480542		DOUBLE ACTING, 12V, EMERGENCY LEVER (10.6 GPM MAX)
S23480480		SERIE, DOUBLE ACTING, SPRING RETURN, LEVER
S23480970		TANDEM, DOUBLE ACTING, SPRING RETURN, LEVER
R23490030	OUTLET	OPEN CENTER
R23400610	ASSY KIT	1 SECTION
R23400620		2 SECTIONS
R23400630		3 SECTIONS
R23400640		4 SECTIONS
R23400650		5 SECTIONS
R23400660		6 SECTIONS
R23400670		7 SECTIONS
R23400680		8 SECTIONS

PARTS

MODEL CODE	DESCRIPTION
795429200	POWER BEYOND PLUG OR CLOSED CENTER
R23400320	DETENT KIT IN & OUT R2
R23400280	DETENT KIT OUT R4
R23400250	DETENT KIT IN R5
R23400033	JOYSTICK KIT
R20289960	JOYSTICK HANDLE
R360T0600	CABLE ADAPTOR KIT
R23400100	PNEUMATIC CONTROL KIT
796370700	PORT RELIEF 290 - 725 PSI
796370701	PORT RELIEF 740 - 1305 PSI
796370702	PORT RELIEF 1320 - 1885 PSI
796370703	PORT RELIEF 1900 - 2970 PSI
796370704	PORT RELIEF 2985 - 4060 PSI
796370725	PORT RELIEF + ANTI-CAVITATION 1900 - 2970 PSI
796270726	PORT RELIEF + ANTI-CAVITATION 2985 - 3985 PSI
R25000650	ANTI-CAVITATION VALVE
R23400060	LEVER BOX
420192000	HANDLE
R23400221	SPRING RETURN
R23400210	SPOOL SEAL KIT
R23400200	SIDE SEAL KIT

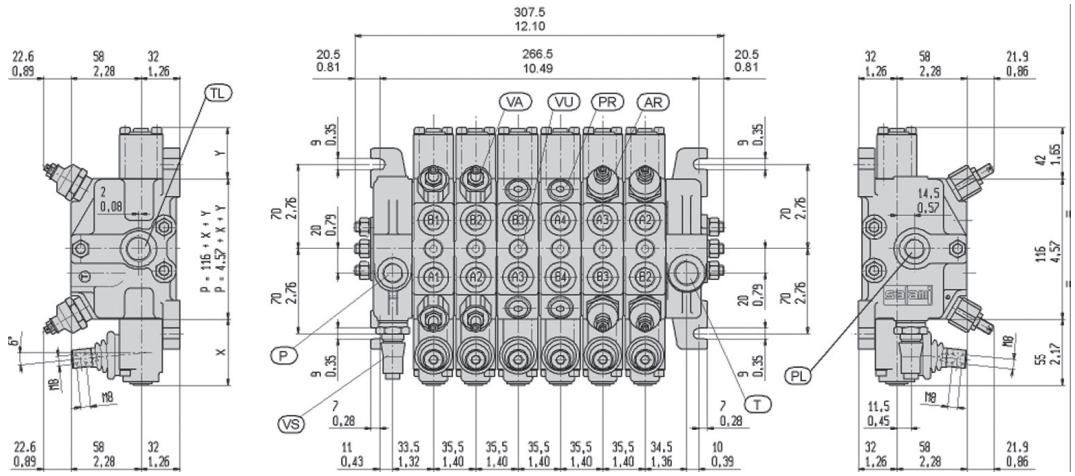

VD8A MANUAL VALVES

- VERY GOOD METERING
- MINIMAL TOLERANCE BETWEEN PARTS FOR MINIMUM INTERNAL LEAKAGE
- PARALLEL CIRCUIT (SERIE AND TANDEM SECTIONS AVAILABLE)
- LOAD CHECK ON EACH SECTION
- SEVERAL TYPE OF SPOOLS AND CONTROLS
- POSSIBILY TO ADD PORT RELIEF WITH OR WITHOUT ANTI-CAVITATION
- ELECTRO-HYDRAULIC CONTROL AVAILABLE
- HANDLES INCLUDED
- WE CAN ASSEMBLE AND CUSTOMIZE FOR YOU

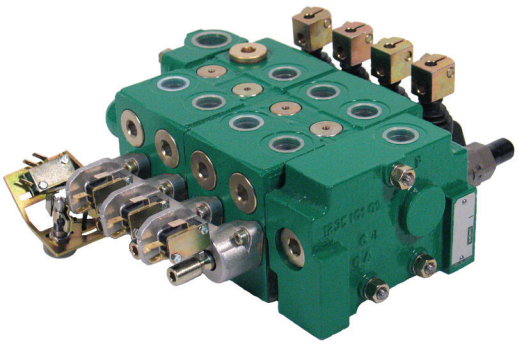

MODEL CODE	SECTIONS	MAX GPM	MAX PSI	PORT SIZE
VD8A	1 - 8	24	5000	P, A & B: SAE-10 T: SAE-12

COMPONENTS

MODEL CODE	TYPE	DESCRIPTION
R23570410	INLET	RELIEF SET TO 2750 PSI
S23580290	SECTION	DOUBLE ACTING, SPRING RETURN, LEVER
S23582951		MOTOR, SPRING RETURN, LEVER
S23581911		SINGLE ACTING PORT A, SPRING RETURN, LEVER
S23582600		4TH POSITION FLOAT, SPRING RETURN, LEVER
S23572720		DOUBLE ACTING, 12V, EMERGENCY LEVER (18.5 GPM MAX)
S23582390		SERIE, DOUBLE ACTING, SPRING RETURN, NO LEVER
S23582800		TANDEM, DOUBLE ACTING, SPRING RETURN, LEVER
R23580030	OUTLET	OPEN CENTER
R23585010	ASSY KIT	1 SECTION
R23585020		2 SECTIONS
R23585030		3 SECTIONS
R23585040		4 SECTIONS
R23585050		5 SECTIONS
R23585060		6 SECTIONS
R23585070		7 SECTIONS
R23585080		8 SECTIONS

PARTS

MODEL CODE	DESCRIPTION
795429200	POWER BEYOND SLEEVE OR CLOSED CENTER
R23500300	DETENT KIT IN & OUT R2
R23500400	DETENT KIT OUT R4
R23500500	DETENT KIT IN R5
R23587570	JOYSTICK KIT
R20289960	JOYSTICK HANDLE
R360T0200	CABLE ADAPTOR KIT
R23575390	PNEUMATIC CONTROL KIT
796366200	PORT RELIEF 220 - 1015 PSI
796370801	PORT RELIEF 1030 - 2175 PSI
796366400	PORT RELIEF 2200 - 3115 PSI
796366700	PORT RELIEF + ANTI-CAVITATION 1450 - 5000 PSI
R20287910	LEVER BOX
420290180	HANDLE
R23575070	SPRING RETURN
R20272590	SPOOL SEAL KIT
R23572500	SIDE SEAL KIT

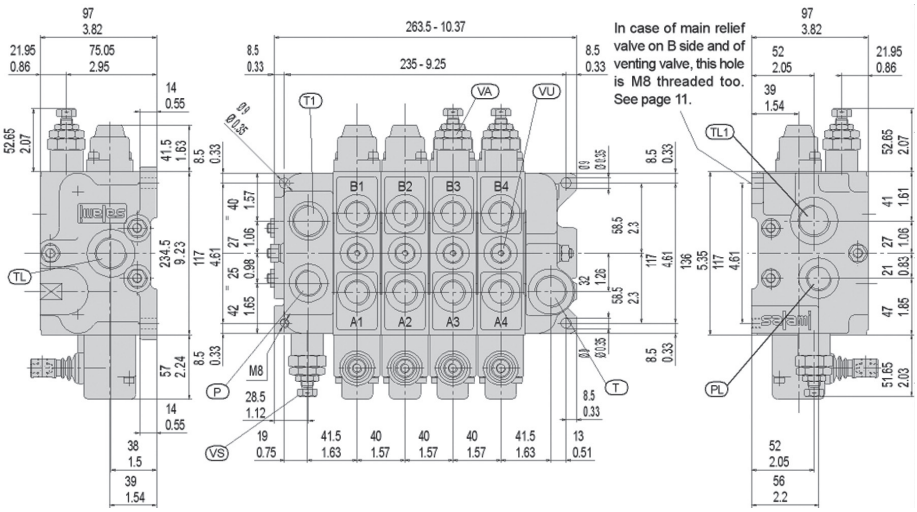

VD10A VALVES

- VERY GOOD METERING
- MINIMAL TOLERANCE BETWEEN PARTS FOR MINIMUM INTERNAL LEAKAGE
- PARALLEL CIRCUIT (SERIE AND TANDEM SECTIONS AVAILABLE)
- LOAD CHECK ON EACH SECTION
- SEVERAL TYPE OF SPOOLS AND CONTROLS
- POSSIBILY TO ADD PORT RELIEF WITH OR WITHOUT ANTI-CAVITATION
- HANDLES INCLUDED
- WE CAN ASSEMBLE AND CUSTOMIZE FOR YOU

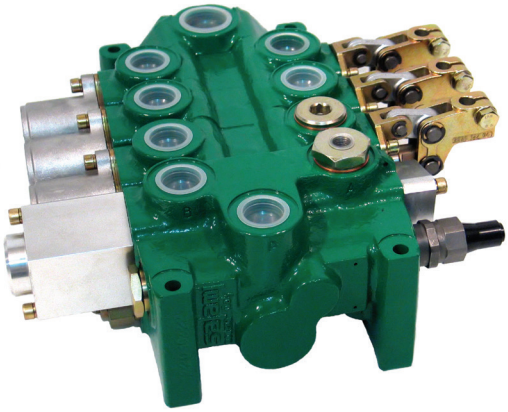

MODEL CODE	SECTIONS	MAX GPM	MAX PSI	PORT SIZE
VD10A	1 - 8	37	4000	P, A & B: SAE-12 T: SAE-16

COMPONENTS

MODEL CODE	TYPE	DESCRIPTION
S22081401	INLET + SECTION	RELIEF SET TO 2750 PSI
S22081391	SECTION	DOUBLE ACTING, SPRING RETURN, LEVER
S22081501		MOTOR, SPRING RETURN, LEVER
S22081531		4TH POSITION FLOAT, SPRING RETURN, LEVER
R22090050	OUTLET	OPEN CENTER
R22085110	ASSY KIT	1 SECTION
R22085120		2 SECTIONS
R22085130		3 SECTIONS
R22085140		4 SECTIONS
R22085150		5 SECTIONS
R22085160		6 SECTIONS
R22085170		7 SECTIONS
R22085180		8 SECTIONS

PARTS

MODEL CODE	DESCRIPTION
R22080130	POWER BEYOND SLEEVE OR CLOSED CENTER
R22400309	DETENT KIT IN & OUT R2
R22400409	DETENT KIT OUT R4
R22400509	DETENT KIT IN R5
R360T0500	CABLE ADAPTOR KIT
R22176331	PNEUMATIC CONTROL KIT
R22078410	PORT RELIEF 725- 1525 PSI
R22078420	PORT RELIEF 1525 - 3045 PSI
R22470080	PORT RELIEF + ANTI-CAVITATION 725 - 4060 PSI
R22187570	LEVER BOX
422187690	HANDLE
R22100200	SPRING RETURN
R22472519	SPOOL SEAL KIT
R22072500	SIDE SEAL KIT

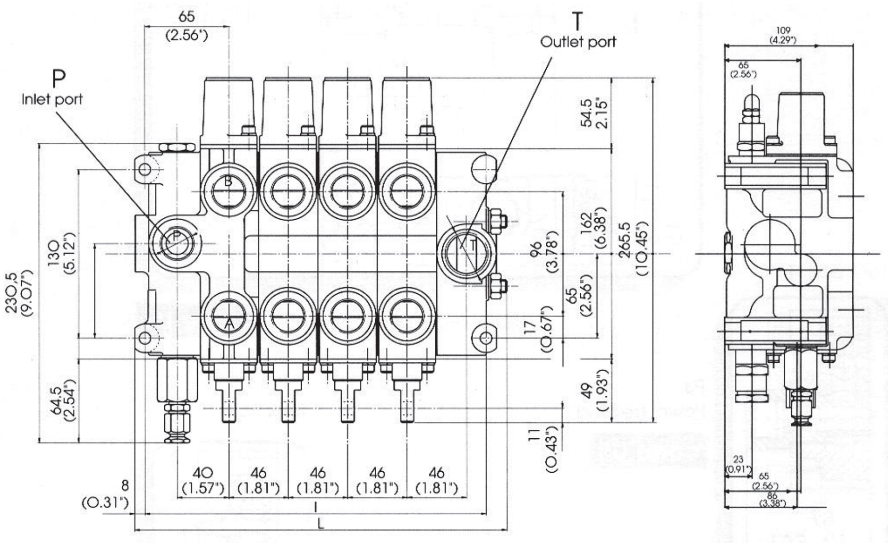

VALVES

VD12A VALVES

- VERY GOOD METERING
- MINIMAL TOLERANCE BETWEEN PARTS FOR MINIMUM INTERNAL LEAKAGE
- PARALLEL CIRCUIT (SERIE AND TANDEM SECTIONS AVAILABLE)
- LOAD CHECK ON EACH SECTION
- SEVERAL TYPE OF SPOOLS AND CONTROLS
- POSSIBILY TO ADD PORT RELIEF WITH OR WITHOUT ANTI-CAVITATION
- HANDLES INCLUDED

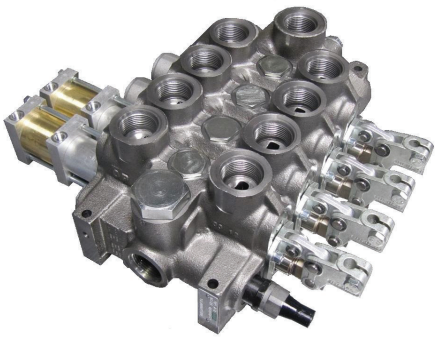

MODEL CODE	SECTIONS	MAX GPM	MAX PSI	PORT SIZE
VD12A	1 - 8	63	4000	P, A & B: SAE-12 T: SAE-16

COMPONENTS

MODEL CODE	TYPE	DESCRIPTION
S22480420	INLET + SECTION	RELIEF SET TO 2750 PSI
S22480410	SECTION	DOUBLE ACTING, SPRING RETURN, LEVER
S22480660		MOTOR, SPRING RETURN, LEVER
S22480470		4TH POSITION FLOAT, SPRING RETURN, LEVER
R22490029	OUTLET	OPEN CENTER, SAE-16
R22490080		OPEN CENTER, SAE-20
R22485019	ASSY KIT	1 SECTION
R22485029		2 SECTIONS
R22485039		3 SECTIONS
R22485049		4 SECTIONS
R22485059		5 SECTIONS
R22485069		6 SECTIONS
R22485079		7 SECTIONS
R22485089		8 SECTIONS

PARTS

MODEL CODE	DESCRIPTION
795429500	POWER BEYOND PLUG OR CLOSED CENTER
R22400309	DETENT KIT IN & OUT R2
R22400409	DETENT KIT OUT R4
R22400509	DETENT KIT IN R5
R360T0500	CABLE ADAPTOR KIT
R22176331	PNEUMATIC CONTROL KIT
R22078410	PORT RELIEF 725- 1525 PSI
R22078420	PORT RELIEF 1525 - 3045 PSI
R22470080	PORT RELIEF + ANTI-CAVITATION 725 - 4060 PSI
R22187570	LEVER BOX
422187690	HANDLE
R22100200	SPRING RETURN
R22472519	SPOOL SEAL KIT
R22472529	SIDE SEAL KIT

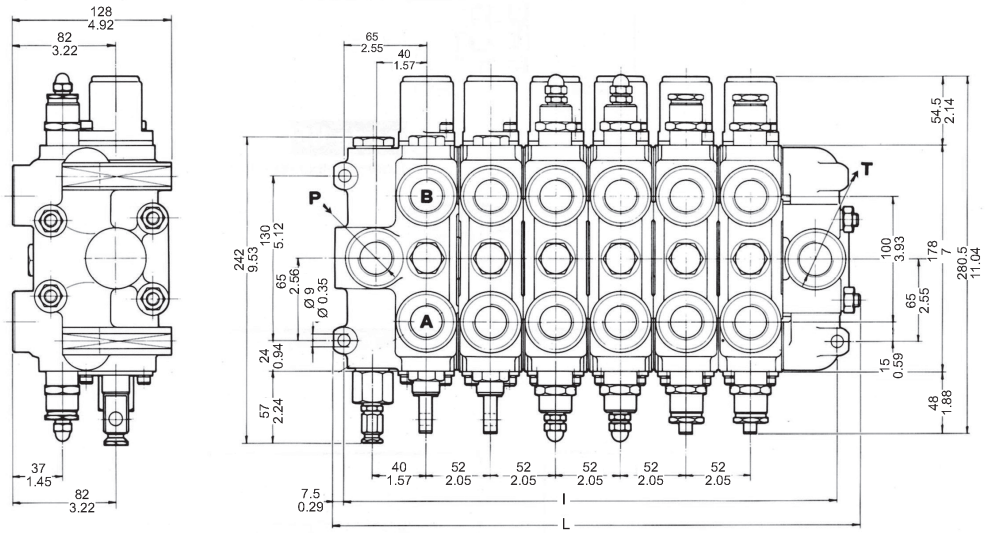

SN-3

NOMINAL FLOW RATE	13 GPM
OPERATING PRESSURE (MAXIMUM) PARALLE CIRCUIT	4600 PSI
BACK PRESSURE (MAXIMUM) ON OUTLET PORT T	360 PSI

SN-4

NOMINAL FLOW RATE	21 GPM
OPERATING PRESSURE (MAXIMUM) PARALLE CIRCUIT	4600 PSI
BACK PRESSURE (MAXIMUM) ON OUTLET PORT T	360 PSI

SN-5

NOMINAL FLOW RATE	32 GPM
OPERATING PRESSURE (MAXIMUM) PARALLE CIRCUIT	4600 PSI
BACK PRESSURE (MAXIMUM) ON OUTLET PORT T	360 PSI

SN-6

NOMINAL FLOW RATE	42 GPM
OPERATING PRESSURE (MAXIMUM) PARALLE CIRCUIT	4600 PSI
BACK PRESSURE (MAXIMUM) ON OUTLET PORT T	360 PSI

SN-8

NOMINAL FLOW RATE	63 GPM
OPERATING PRESSURE (MAXIMUM) PARALLE CIRCUIT	4600 PSI
BACK PRESSURE (MAXIMUM) ON OUTLET PORT T	360 PSI

PV4 VALVES

- LOAD SENSING PROPORTIONAL FOR FIXED AND VARIABLE DISPLACEMENT PUMPS
- FOR MOBILE & INDUSTRIAL APPLICATION
- FULLY CUSTOMIZED VALVE
- CHOICE OF SPOOLS ESPECIALLY DESIGNED FOR REQUEST FLOW
- LEVERS WITH INDIVIDUAL FLOW ADJUSTMENT SCREWS
- MANY CONTROLS AVAILBLE SUCH AS:
  - SINGLE MANUAL LEVERS
  - ELECTRONIC ON/OFF SIGNAL
  - PROPORTIONNAL ANALOG OR PWM SIGNAL
  - HYDRAULIC & CABLE CONTROLS
  - FRICTION DETENT
- SHOCK AND ANTI-CAVITATION VALVES AVAILABLE
- GREAT CHOICE OF DIFFERENT INLETS

FITS "PVG32"
DANFOSS FOOTPRINT

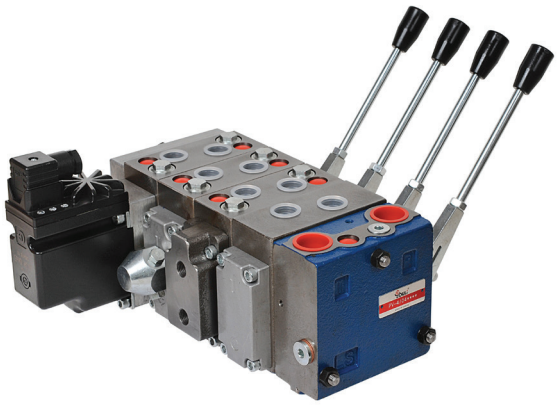

PV3 VALVES

- SAME AS PV4 VALVES. MORE COMPACT SECTIONS
- FITS "PVG16" DANFOSS FOOTPRINT

MODELS	MAX GPM	MAX PSI	PORT SIZE		
			P	T	A & B
PV3 OR PV4	37	5075	SAE-08 SAE-10	SAE-12	SAE-10

PVH-1 PROPORTIONAL CONTROL

- SINGLE LEVER FOR ONE SECTION OPERATION
- ESPECIALLY DESIGNED TO BE INSTALLED WITH PV4 & PV3 VALVES

INPUT RANGE	11-30VDC
CURRENT CONSUMPTION	100 mA
OUTPUT VOLTAGE	0.25 - 0.75 VDC
NEUTRAL VOLTAGE	0.5 VDC

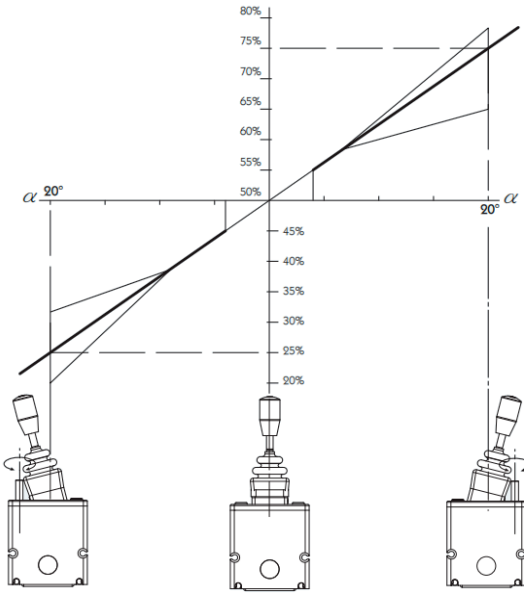

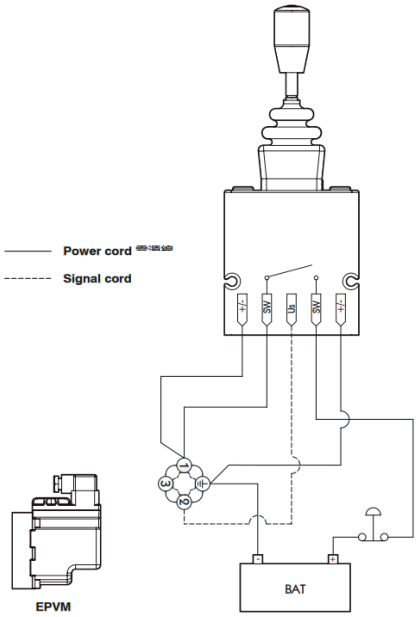

PDV VALVES

PDV VALVES ARE NEW BREAKTHROUGH PRODUCTS WITH UPGRADED HYDRAULIC FUNCTIONS THAT FULFILL THE EVER INCREASING MARKET DEMANDS FOR IMPROVED MACHINES PRODUCTIVITY, SAFETY, REQUIREMENTS, ENERGY EFFICIENT AND ENVIRONMENTAL OPERATION.

BASED ON LOAD SENSING TECHNOLOGY, THE ABILITY TO METER IN OUT ANY LOAD ACTUATORS PROVIDES A WIDE CHOICE OF CONTROL OPTIONS, AND ARE MEANT TO BE USED IN HAZARDOUS AREA.

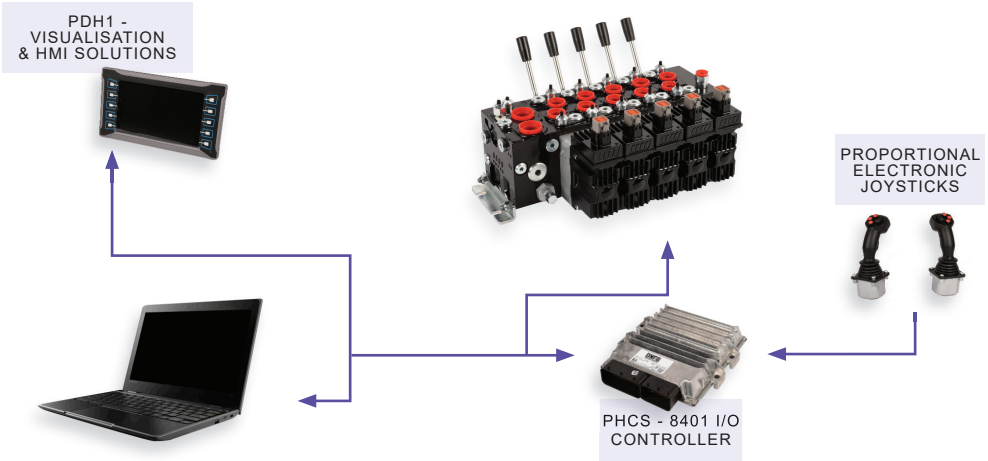

- ELECTROYDRAULIC CONTROL
- HYDRAULIC CONTROL
- MANUAL CONTROL
- UP-STREAM PRESSURE COMPENSATED
- LOAD INDEPENDENT FLOW
- CAN BE OPERATES WITH BOTH FIXED AND VARIABLE DISPLACEMENT PUMPS
- HIGH POWER CAPABILITY CONTROL IN COMPACT DIMENSION
- HIGH REPEATABILITY FLOW ACCURACY
- FLEXIBLE HIGH-QUALITY PRODUCT

MODELS	MAX GPM P PORT	MAX GPM A&B PORTS	MAX PSI	PORT SIZE		
				P	T	A&B
PDV 74	42	34	5370	SAE-12	SAE-12	SAE-10
PDV 114	69	50		SAE-16	SAE-16	SAE-12
PDV 315	158	132		1 1/4" CODE FLANGE 62 (MM)	1 1/2" CODE FLANGE 61 (MM)	1 1/4" CODE FLANGE 62 (MM)

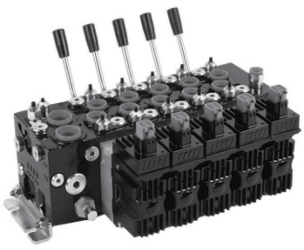

PDV 74

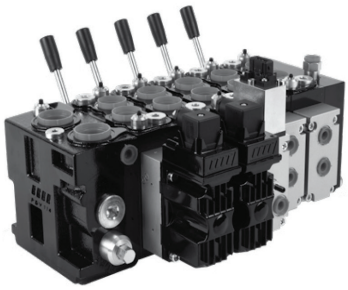

PDV 114

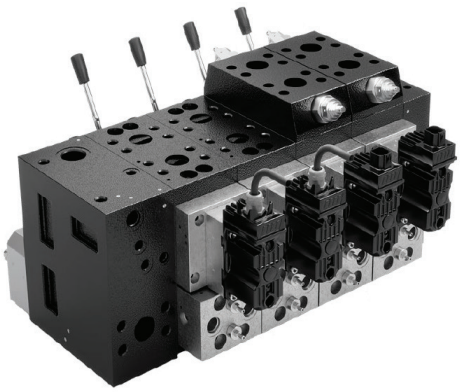

PDV 315

WIRELESS TRANSMITTER AND RECEIVER

Remote control solutions for industries where safety and reliability are crucial. the operator can stand on the side and control the machine from a safe distance. Ideal for :

- large construction cranes
- drilling rigs
- concrete pumps
- forestry machines
- truck cranes

BAILEY BLUETOOTH® CONTROLLER

The Bailey Bluetooth® Controller is a Bluetooth® receiver with four outputs. Using the Bailey App on your smartphone, electrical loads can be switched on and off. The Bailey app allows the user to visualize the respective outputs as well as their status (on / off) and create unique configurations for each functions application. Application examples include: hydraulic power unit control, winches, dump trailers, lift tables, roll-back trucks, jacks, electric motor, lights, and more.

Features:

- 9-36Vdc, 10 amps, 3.7 amps per channel
- 4-function configurable control outputs
- Operating range up to 246 ft.
- -40° to 176° F temperature range
- Molded casing (IP66)
- Easy install with plug and play wiring harness and setup guide
- Customized icons for a variety of applications
- Momentary, maintained, timed, and lock-out control options
- Settings are stored on receiver and can be password protected
- Retail packaged and user manual included

BAILEY PART NO
301300

APPLICATION ICONS

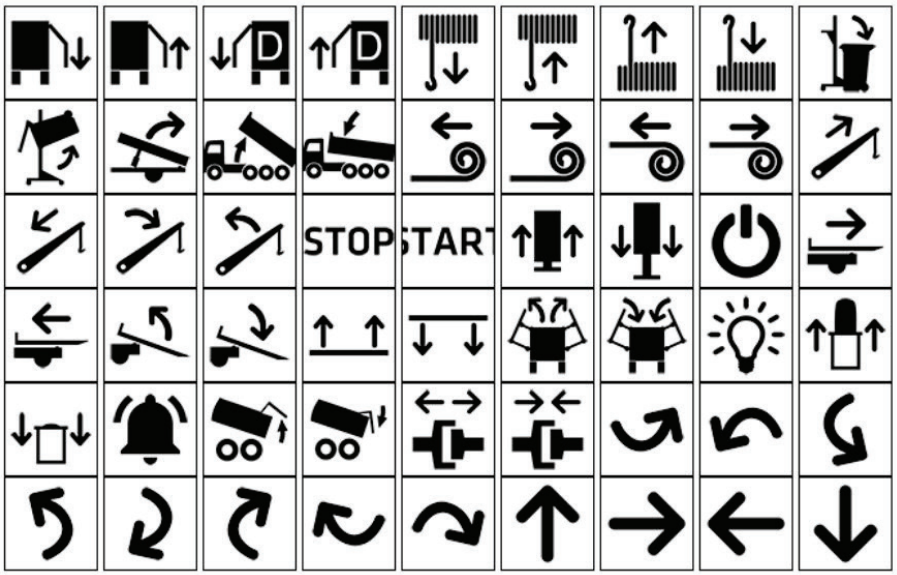

Air proportional cab switch with full integrated lever to control both PTO engagement and tipping/lowering. Several versions available to meet any requirements.

N-FORCE PNEUMATIC CONTROLS

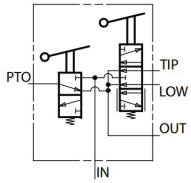

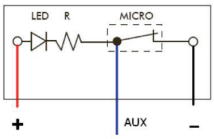

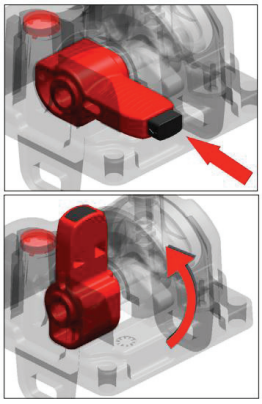

MODEL CODE	DESCRIPTION
100 001 81003	AUTOMATIC PTO KNOCK-OFF, 1/4" AIR FITTINGS
100 001 81030	MANUAL PTO KNOCK-OFF, 1/4" AIR FITTINGS

N-GAGE AIR CAB SWITCH

MODEL CODE	DESCRIPTION
100 001 81003	3/2, DETENT, LED, 1/4" AIR FITTINGS

3 POSITION PNEUMATIC CONTROLS

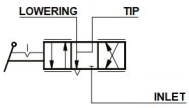

MODEL CODE	DESCRIPTION
100 001 42015	DETENT ON NEUTRAL POSITION. PROPORTIONNAL LOWERING TIPPING

ALSO AVAILABLE ON REQUEST

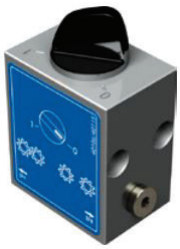

SINGLE AND DUAL
ROTARY PNEUMATIC SWITCHES

PUSH PULL PNEUMATIC SWITCHES

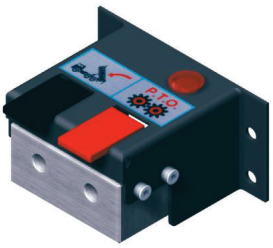

DUAL AND TRIPLE
PNEUMATIC SWITCHES

FITS ON HYDRAULIC VALVES

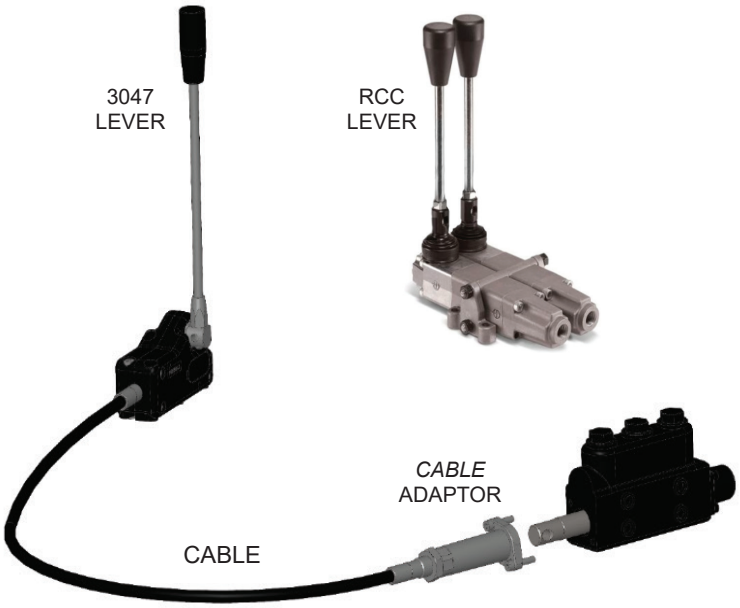

LEVER AND JOYSTICK

MODEL CODE	DESCRIPTION	BRAND
3047	SINGLE AXIS	SALAMI, PRINCE
3336	DUAL AXIS	
RCC3-1S-HL+GC	SINGLE AXIS FOR MB2, MB3, MB4	YOULI, WALVOIL
RCC5-1S-HL+GC	SINGLE AXIS FOR MB5	
FCR-2	DUAL AXIS JOYSTICK	

CABLE ADAPTORS FOR VALVES

MODEL CODE	VALVE MODELS	BRAND
R360T0200	VDM8, VD8A, VDM7	SALAMI
R360T0400	VDM9	
R360T0500	VD10A & VD12A	
R360T0600	VDM6, VD6A, VDM6A	
660170035	V20	PRINCE
660170037	RD500	
YLMB45003	MB2, MB3, MB4 & SD4, SD5	YOULI, WALVOIL
YLMB55003	MB5 & SD11	

LEVER VALVE

CABLE-XXXX TYPE

CABLES

MODEL CODE	LENGHT	BRAND
IT-731133/01.00	39.4 IN (1 M)	SALAMI, PRINCE
IT-731133/01.50	59.1 IN (1.5 M)	
IT-731133/02.00	78.7 IN (2 M)	
IT-731133/02.50	98.4 IN (2.5 M)	
IT-731133/03.00	118.1 IN (3 M)	
IT-731133/03.50	137.8 IN (3.5 M)	
IT-731133/04.00	157.5 IN (4 M)	
CABLE-1000	39.4 IN (1 M)	YOULI, WALVOIL
CABLE-1500	59.1 IN (1.5 M)	
CABLE-2000	78.7 IN (2 M)	

LEVER VALVE

IT-3056/CABLE TYPE

MORSE TYPE LEVERS

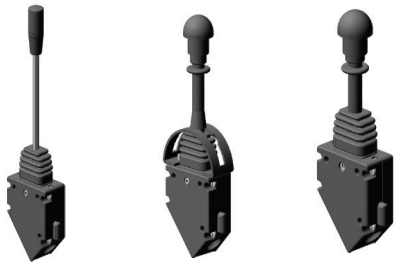

LEVERS

MODEL CODE	DESCRIPTION	TRAVEL
3430	SPRING RETURN	32 MM
3488	WITH DETENT	
3461	WITH CENTRAL LOCK KNOB	

CABLES

MODEL CODE	LENGHT	FIT
732491/01.00	39.4 IN (1 M)	MORSE TYPE LEVERS
732491/02.00	78.7 IN (2 M)	
732491/03.00	118.1 IN (3 M)	

LONG STROKE LEVERS

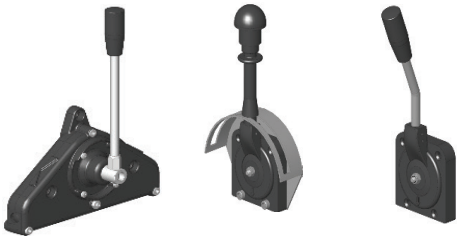

LEVERS

MODEL CODE	DESCRIPTION	TRAVEL
3472	RACK GEAR	75 MM
3401	HAND THROTTLE	80 MM
3408	HAND THROTTLE WITH LEVER	

CABLES

MODEL CODE	LENGHT	FIT
741715/01.50	59.1 IN (1.5 M)	RACK GEARS
741715/02.00	78.7 IN (2 M)	
741715/03.00	118.1 IN (3 M)	
732882/01.00	39.4 IN (1 M)	HAND THROTTLE
732882/02.00	78.7 IN (2 M)	
732882/03.00	118.1 IN (3 M)	

PEDAL THROTTLES

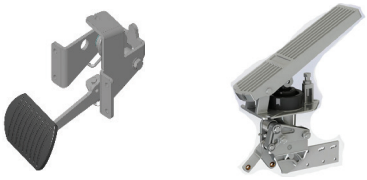

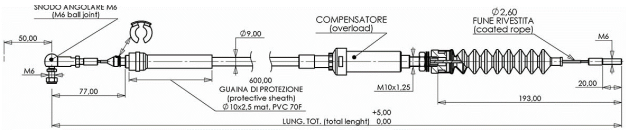

THROTTLES

MODEL CODE	DESCRIPTION	TRAVEL
4021	BULKHEAD MOUNT WITH DETENT	28 MM
208991	FLOOR MOUNT, WITH LEVER	

CABLES

MODEL CODE	LENGHT	FIT
732491/01.00	39.4 IN (1 M)	BULKHEAD MOUNT PEDAL
732491/02.00	78.7 IN (2 M)	
732491/03.00	118.1 IN (3 M)	

ROCKER PEDALS

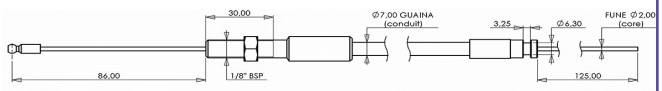

PEDALS

MODEL CODE	DESCRIPTION	TRAVEL
631368	SINGLE ROCKER PEDAL	17 MM
631366	DOUBLE ROCKER PEDALS	14 MM

CABLES

MODEL CODE	LENGHT	FIT
731921/01.00	39.4 IN (1 M)	ROCKER PEDAL
731921/02.00	78.7 IN (2 M)	
731921/03.00	118.1 IN (3 M)	

CETOP D03 VALVES

- INTERCHANGEABLE WITH CETOP AND ISO VALVES ON THE MARKET
- DIN CONNECTORS WITH LED INCLUDED
- BOLTKIT INCLUDED (HYDRO-CUSTOM VALVES ONLY)
- UL AND CE PROOF. CSA ON DEMAND
- OTHER SPOOL MODELS AND VOLTAGE AVAILAILBLE
- SOFTSHIFT VALVES AVAILABLE

DIN CONN

TERMINAL BOX

MAXIMUM PRESSURE: 4560 PSI
MAXIMUM BACK PRESSURE: 2320 PSI
WEIGHT: 4.0 LBS (3.0 LBS FOR 2 POSITION MODELS)

HYDRO CUSTOM MODEL CODE	VOLTAGE	MAX GPM @3600 PSI	SPOOL MODEL	MAX GPM @3600 PSI	VOLTAGE	YUKEN PART NO
4WE6-D-6X/ED12-LL	12 VDC DIN	18		21	12 VDC DIN	DSG01-2B2-D12N
4WE6-D-6X/ED12-BL	12 VDC BOX				12 VDC BOX	DSG01-2B2-D12
4WE6-D-6X/ED24-LL	24 VDC DIN				24 VDC DIN	DSG01-2B2-D24N
4WE6-D-6X/ED24-BL	24 VDC BOX				24 VDC BOX	DSG01-2B2-D24
4WE6-D-6X/ER110-LL	110 VAC DIN				110 VAC DIN	DSG01-2B2-A120N
4WE6-D-6X/ER110-BL	110 VAC BOX				110 VAC BOX	DSG01-2B2-A120
4WE6-E-6X/ED12-LL	12 VDC DIN	21		26	12 VDC DIN	DSG01-3C2-D12N
4WE6-E-6X/ED12-BL	12 VDC BOX				12 VDC BOX	DSG01-3C2-D12
4WE6-E-6X/ED24-LL	24 VDC DIN				24 VDC DIN	DSG01-3C2-D24N
4WE6-E-6X/ED24-BL	24 VDC BOX				24 VDC BOX	DSG01-3C2-D24
4WE6-E-6X/ER110-LL	110 VAC DIN				110 VAC DIN	DSG01-3C2-A120N
4WE6-E-6X/ER110-BL	110 VAC BOX				110 VAC BOX	DSG01-3C2-A120
4WE6-H-6X/ED12-LL	12 VDC DIN	13		24	12 VDC DIN	DSG01-3C3-D12N
4WE6-H-6X/ED12-BL	12 VDC BOX				12 VDC BOX	DSG01-3C3-D12
4WE6-H-6X/ED24-LL	24 VDC DIN				24 VDC DIN	DSG01-3C3-D24N
4WE6-H-6X/ED24-BL	24 VDC BOX				24 VDC BOX	DSG01-3C3-D24
4WE6-H-6X/ER110-LL	110 VAC DIN				110 VAC DIN	DSG01-3C3-A120N
4WE6-H-6X/ER110-BL	110 VAC BOX				110 VAC BOX	DSG01-3C3-A120
4WE6-J-6X/ED12-LL	12 VDC DIN	21		24	12 VDC DIN	DSG01-3C4-D12N
4WE6-J-6X/ED12-BL	12 VDC BOX				12 VDC BOX	DSG01-3C4-D12
4WE6-J-6X/ED24-LL	24 VDC DIN				24 VDC DIN	DSG01-3C4-D24N
4WE6-J-6X/ED24-BL	24 VDC BOX				24 VDC BOX	DSG01-3C4-D24
4WE6-J-6X/ER110-LL	110 VAC DIN				110 VAC DIN	DSG01-3C4-A120N
4WE6-J-6X/ER110-BL	110 VAC BOX				110 VAC BOX	DSG01-3C4-A120
4WE6-G-6X/ED12-LL	12 VDC DIN	13	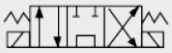	10	12 VDC DIN	DSG01-3C60-D12N
4WE6-G-6X/ED12-BL	12 VDC BOX				12 VDC BOX	DSG01-3C60-D12
4WE6-G-6X/ED24-LL	24 VDC DIN				24 VDC DIN	DSG01-3C60-D24N
4WE6-G-6X/ED24-BL	24 VDC BOX				24 VDC BOX	DSG01-3C60-D24
4WE6-G-6X/ER110-LL	110 VAC DIN				110 VAC DIN	DSG01-3C60-A120N
4WE6-G-6X/ER110-BL	110 VAC BOX				110 VAC BOX	DSG01-3C60-A120

YUKEN VALVES: BOLT KIT MUST BE ORDERED SEPARATELY

BOLT KIT

MODEL CODE	DESCRIPTION
MBK01-175	INCLUDED WITH HYDRO-CUSTOM VALVES NOT INCLUDED WITH YUKEN VALVES. MUST BE ORDERED SEPARATELY

SUBPLATES

MODEL CODE	DESCRIPTION	WEIGHT (LBS)
SPA03-SB-S08	ALU, 3000 PSI, ALL PORTS ON SIDE. P & T ALSO ON BOTTOM	1.5
SPA03-SB-S08-C10-2	SAME AS SPA03-SB-S08 PLUS C10-2 RELIEF CAVITY	2.5

CETOP D05 VALVES

- INTERCHANGEABLE WITH CETOP AND ISO VALVES ON THE MARKET
- DIN CONNECTORS WITH LED INCLUDED
- BOLTKIT INCLUDED (HYDRO-CUSTOM VALVES ONLY)
- UL AND CE PROOF. CSA ON DEMAND
- OTHER SPOOL MODELS AND VOLTAGE AVAILAILBLE
- SOFTSHIFT VALVES AVAILABLE

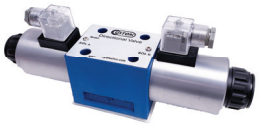

DIN CONN

TERMINAL BOX

MAXIMUM PRESSURE: 4560 PSI
MAXIMUM BACK PRESSURE: 2320 PSI
WEIGHT: 7.9 LBS (6.4 LBS FOR THE 2 POSITION MODELS)

HYDRO CUSTOM MODEL CODE	VOLTAGE	MAX GPM @3600 PSI	SPOOL MODEL	MAX GPM @3600 PSI	VOLTAGE	YUKEN PART NO
4WE10-D-3X/CD12-LL	12 VDC DIN	26	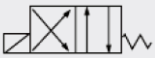	32	12 VDC DIN	DSG03-2B2-D12N
4WE10-D-3X/CD12-BL	12 VDC BOX				12 VDC BOX	DSG03-2B2-D12
4WE10-D-3X/CD24-LL	24 VDC DIN				24 VDC DIN	DSG03-2B2-D24N
4WE10-D-3X/CD24-BL	24 VDC BOX				24 VDC BOX	DSG03-2B2-D24
4WE10-D-3X/CR110-LL	110 VAC DIN				110 VAC DIN	DSG03-2B2-A120N
4WE10-D-3X/CR110-BL	110 VAC BOX				110 VAC BOX	DSG03-2B2-A120
4WE10-E-3X/CD12-LL	12 VDC DIN	32		26	12 VDC DIN	DSG03-3C2-D12N
4WE10-E-3X/CD12-BL	12 VDC BOX				12 VDC BOX	DSG03-3C2-D12
4WE10-E-3X/CD24-LL	24 VDC DIN				24 VDC DIN	DSG03-3C2-D24N
4WE10-E-3X/CD24-BL	24 VDC BOX				24 VDC BOX	DSG03-3C2-D24
4WE10-E-3X/CR110-LL	110 VAC DIN				110 VAC DIN	DSG03-3C2-A120N
4WE10-E-3X/CR110-BL	110 VAC BOX				110 VAC BOX	DSG03-3C2-A120
4WE10-H-3X/CD12-LL	12 VDC DIN	26		24	12 VDC DIN	DSG03-3C3-D12N
4WE10-H-3X/CD12-BL	12 VDC BOX				12 VDC BOX	DSG03-3C3-D12
4WE10-H-3X/CD24-LL	24 VDC DIN				24 VDC DIN	DSG03-3C3-D24N
4WE10-H-3X/CD24-BL	24 VDC BOX				24 VDC BOX	DSG03-3C3-D24
4WE10-H-3X/CR110-LL	110 VAC DIN				110 VAC DIN	DSG03-3C3-A120N
4WE10-H-3X/CR110-BL	110 VAC BOX				110 VAC BOX	DSG03-3C3-A120
4WE10-J-3X/CD12-LL	12 VDC DIN	32		24	12 VDC DIN	DSG03-3C4-D12N
4WE10-J-3X/CD12-BL	12 VDC BOX				12 VDC BOX	DSG03-3C4-D12
4WE10-J-3X/CD24-LL	24 VDC DIN				24 VDC DIN	DSG03-3C4-D24N
4WE10-J-3X/CD24-BL	24 VDC BOX				24 VDC BOX	DSG03-3C4-D24
4WE10-J-3X/CR110-LL	110 VAC DIN				110 VAC DIN	DSG03-3C4-A120N
4WE10-J-3X/CR110-BL	110 VAC BOX				110 VAC BOX	DSG03-3C4-A120
4WE10-G-3X/CD12-LL	12 VDC DIN	21	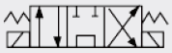	18	12 VDC DIN	DSG03-3C60-D12N
4WE10-G-3X/CD12-BL	12 VDC BOX				12 VDC BOX	DSG03-3C60-D12
4WE10-G-3X/CD24-LL	24 VDC DIN				24 VDC DIN	DSG03-3C60-D24N
4WE10-G-3X/CD24-BL	24 VDC BOX				24 VDC BOX	DSG03-3C60-D24
4WE10-G-3X/CR110-LL	110 VAC DIN				110 VAC DIN	DSG03-3C60-A120N
4WE10-G-3X/CR110-BL	110 VAC BOX				110 VAC BOX	DSG03-3C60-A120

YUKEN VALVES: BOLT KIT MUST BE ORDERED SEPARATELY

BOLT KIT

MODEL CODE	DESCRIPTION
MBK03-150	INCLUDED WITH HYDRO-CUSTOM VALVES NOT INCLUDED WITH YUKEN VALVES. MUST BE ORDERED SEPARATELY

SUBPLATES

MODEL CODE	DESCRIPTION	WEIGHT (LBS)
SPA05-SP-S10	ALU, 3000 PSI, SAE-10, SIDE PORTS	3.3
SPA05-SB-S10-C10-2	ALU, 3000 PSI, SIDE PORTS. P & T ALSO ON BOTTOM, SAE-10 C10-2 RELIEF CAVITY	3.3

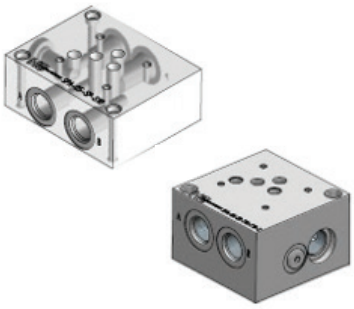

CETOP D07 VALVES

- INTERCHANGEABLE WITH CETOP AND ISO VALVES ON THE MARKET
- DIN CONNECTORS WITH LED INCLUDED
- UL AND CE PROOF. CSA ON DEMAND
- OTHER SPOOL MODELS AND VOLTAGE AVAILAILBLE
- INTERNAL PILOT, EXTERNAL DRAIN SETUP. EASY TO MODIFY

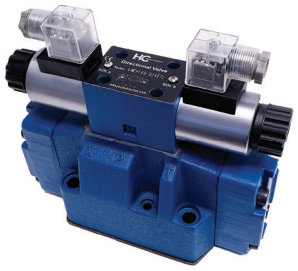

MAXIMUM PRESSURE: 4560 PSI
MAXIMUM BACK PRESSURE: 2320 PSI
WEIGHT: 18.7 LBS (17.6 LBS FOR 2 POSITION MODELS)

HYDRO CUSTOM MODEL CODE	VOLTAGE	MAX GPM @3600 PSI	SPOOL MODEL	MAX GPM @3600 PSI	VOLTAGE	YUKEN MODEL CODE
4WEH16-D-D12-E-LL	12 VDC DIN	66		79	12 VDC DIN	DSHG04-2B2-D12N
4WEH16-D-D12-E-BL	12 VDC BOX				12 VDC BOX	DSHG04-2B2-D12
4WEH16-D-D24-E-LL	24 VDC DIN				24 VDC DIN	DSHG04 -2B2-D24N
4WEH16-D-D24-E-BL	24 VDC BOX				24 VDC BOX	DSHG04-2B2-D24
4WEH16-D-R110-E-LL	110 VAC DIN				110 VAC DIN	DSHG04-2B2-A120N
4WEH16-D-R110-E-BL	110 VAC BOX				110 VAC BOX	DSHG04-2B2-A120
4WEH16-E-D12-E-LL	12 VDC DIN	66		53	12 VDC DIN	DSHG04-3C2-D12N
4WEH16-E-D12-E-BL	12 VDC BOX				12 VDC BOX	DSHG04-3C2-D12
4WEH16-E-D24-E-LL	24 VDC DIN				24 VDC DIN	DSHG04-3C2-D24N
4WEH16-E-D24-E-BL	24 VDC BOX				24 VDC BOX	DSHG04-3C2-D24
4WEH16-E-R110-E-LL	110 VAC DIN				110 VAC DIN	DSHG04-3C2-A120N
4WEH16-E-R110-E-BL	110 VAC BOX				110 VAC BOX	DSHG04-3C2-A120
4WEH16-H-D12-E-LL*	12 VDC DIN	79		79	12 VDC DIN	DSHG04-3C3-D12N
4WEH16-H-D12-E-BL*	12 VDC BOX				12 VDC BOX	DSHG04-3C3-D12
4WEH16-H-D24-E-LL*	24 VDC DIN				24 VDC DIN	DSHG04-3C3-D24N
4WEH16-H-D24-E-BL*	24 VDC BOX				24 VDC BOX	DSHG04-3C3-D24
4WEH16-H-R110-E-LL*	110 VAC DIN				110 VAC DIN	DSHG04-3C3-A120N
4WEH16-H-R110-E-BL*	110 VAC BOX				110 VAC BOX	DSHG04-3C3-A120
4WEH16-J-D12-E-LL	12 VDC DIN	79		66	12 VDC DIN	DSHG04-3C4-D12N
4WEH16-J-D12-E-BL	12 VDC BOX				12 VDC BOX	DSHG04-3C4-D12
4WEH16-J-D24-E-LL	24 VDC DIN				24 VDC DIN	DSHG04-3C4-D24N
4WEH16-J-D24-E-BL	24 VDC BOX				24 VDC BOX	DSHG04-3C4-D24
4WEH16-J-R110-E-LL	110 VAC DIN				110 VAC DIN	DSHG04-3C4-A120N
4WEH16-J-R110-E-BL	110 VAC BOX				110 VAC BOX	DSHG04-3C4-A120
4WEH16-G-D12-E-LL*	12 VDC DIN	66		79	12 VDC DIN	DSHG04-3C60-D12N
4WEH16-G-D12-E-BL*	12 VDC BOX				12 VDC BOX	DSHG04-3C60-D12
4WEH16-G-D24-E-LL*	24 VDC DIN				24 VDC DIN	DSHG04-3C60-D24N
4WEH16-G-D24-E-BL*	24 VDC BOX				24 VDC BOX	DSHG04-3C60-D24
4WEH16-G-R110-E-LL*	110 VAC DIN				110 VAC DIN	DSHG04-3C60-A120N
4WEH16-G-R110-E-BL*	110 VAC BOX				110 VAC BOX	DSHG04-3C60-A120

* BACK PRESSURE VALVE REQUIRED

BOLT KIT

MODEL CODE	DESCRIPTION
MBK04	BOLT KIT FOR D07 VALVES

BACKPRESSURE VALVE

MODEL CODE	DESCRIPTION
4WEH 16-BPV	INSTALL ON 4WEH16-G AND 4WEH16-G VALVES

SUBPLATES

MODEL CODE	DESCRIPTION	WEIGHT (LBS)
SPA07-SP-S16	ALU, 3000 PSI, SAE-16, SIDE PORTS	7.0

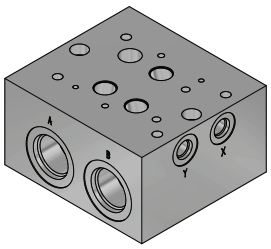

CETOP D08 VALVES

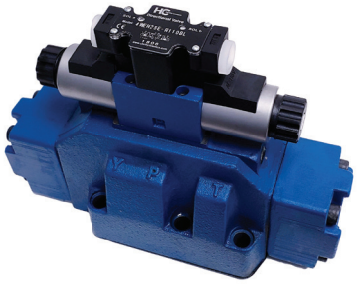

- INTERCHANGEABLE WITH CETOP AND ISO VALVES ON THE MARKET
- DIN CONNECTORS WITH LED INCLUDED
- UL AND CE PROOF. CSA ON DEMAND
- OTHER SPOOL MODELS AND VOLTAGE AVAILAILBLE
- INTERNAL PILOT, EXTERNAL DRAIN SETUP. EASY TO MODIFY

MAXIMUM PRESSURE: 5075 PSI
MAXIMUM BACK PRESSURE: 2320 PSI
WEIGHT: 27.3 LBS (26.2 LBS FOR 2 POSITION MODELS)

HYDRO CUSTOM MODEL CODE	VOLTAGE	MAX GPM @3600 PSI	SPOOL MODEL	MAX GPM @3600 PSI	VOLTAGE	YUKEN MODEL CODE
4WEH25-D-D12-E-LL	12 VDC DIN	172	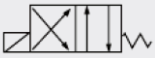	132	12 VDC DIN	DSHG06-2B2-D12N
4WEH25-D-D12-E-BL	12 VDC BOX				12 VDC BOX	DSHG06-2B2-D12
4WEH25-D-D24-E-LL	24 VDC DIN				24 VDC DIN	DSHG06-2B2-D24N
4WEH25-D-D24-E-BL	24 VDC BOX				24 VDC BOX	DSHG06-2B2-D24
4WEH25-D-R110-E-LL	110 VAC DIN				110 VAC DIN	DSHG06-2B2-A120N
4WEH25-D-R110-E-BL	110 VAC BOX				110 VAC BOX	DSHG06-2B2-A120
4WEH25-E-D12-E-LL	12 VDC DIN	172		132	12 VDC DIN	DSHG06-3C2-D12N
4WEH25-E-D12-E-BL	12 VDC BOX				12 VDC BOX	DSHG06-3C2-D12
4WEH25-E-D24-E-LL	24 VDC DIN				24 VDC DIN	DSHG06-3C2-D24N
4WEH25-E-D24-E-BL	24 VDC BOX				24 VDC BOX	DSHG06-3C2-D24
4WEH25-E-R110-E-LL	110 VAC DIN				110 VAC DIN	DSHG06-3C2-A120N
4WEH25-E-R110-E-BL	110 VAC BOX				110 VAC BOX	DSHG06-3C2-A120
4WEH25-H-D12-E-LL*	12 VDC DIN	172		122	12 VDC DIN	DSHG06-3C3-D12N
4WEH25-H-D12-E-BL*	12 VDC BOX				12 VDC BOX	DSHG06-3C3-D12
4WEH25-H-D24-E-LL*	24 VDC DIN				24 VDC DIN	DSHG06-3C3-D24N
4WEH25-H-D24-E-BL*	24 VDC BOX				24 VDC BOX	DSHG06-3C3-D24
4WEH25-H-R110-E-LL*	110 VAC DIN				110 VAC DIN	DSHG06-3C3-A120N
4WEH25-H-R110-E-BL*	110 VAC BOX				110 VAC BOX	DSHG06-3C3-A120
4WEH25-J-D12-E-LL	12 VDC DIN	164		132	12 VDC DIN	DSHG06-3C4-D12N
4WEH25-J-D12-E-BL	12 VDC BOX				12 VDC BOX	DSHG06-3C4-D12
4WEH25-J-D24-E-LL	24 VDC DIN				24 VDC DIN	DSHG06-3C4-D24N
4WEH25-J-D24-E-BL	24 VDC BOX				24 VDC BOX	DSHG06-3C4-D24
4WEH25-J-R110-E-LL	110 VAC DIN				110 VAC DIN	DSHG06-3C4-A120N
4WEH25-J-R110-E-BL	110 VAC BOX				110 VAC BOX	DSHG06-3C4-A120
4WEH25-G-D12-E-LL*	12 VDC DIN	172		90	12 VDC DIN	DSHG06-3C60-D12N
4WEH25-G-D12-E-BL*	12 VDC BOX				12 VDC BOX	DSHG06-3C60-D12
4WEH25-G-D24-E-LL*	24 VDC DIN				24 VDC DIN	DSHG06-3C60-D24N
4WEH25-G-D24-E-BL*	24 VDC BOX				24 VDC BOX	DSHG06-3C60-D24
4WEH25-G-R110-E-LL*	110 VAC DIN				110 VAC DIN	DSHG06-3C60-A120N
4WEH25-G-R110-E-BL*	110 VAC BOX				110 VAC BOX	DSHG06-3C60-A120

* BACK PRESSURE VALVE REQUIRED

BOLT KIT

MODEL CODE	DESCRIPTION
MBK06	BOLT KIT FOR D08 VALVES

BACKPRESSURE VALVE

MODEL CODE	DESCRIPTION
4WEH 25-BPV	INSTALL ON 4WEH25-G AND 4WEH25-G VALVES

SUBPLATES

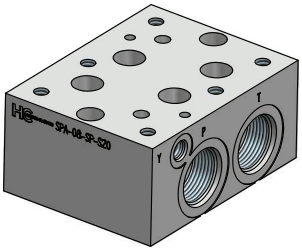

MODEL CODE	DESCRIPTION	WEIGHT (LBS)
SPA08-SP-S20	ALUMINIUM, 3000 PSI, SAE-20, SIDE PORTS	7.6

MODULAR VALVES

- COMPACT DESIGN
- MULTIPLE CIRCUITS
- STACKABLE
- AVAILABLE IN ALUMINUM OR STEEL
- LESS OVERCROWDING HOSE AND FITTING LOWERING THE AMOUNT OF LEAK POINT

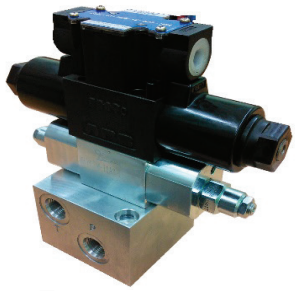

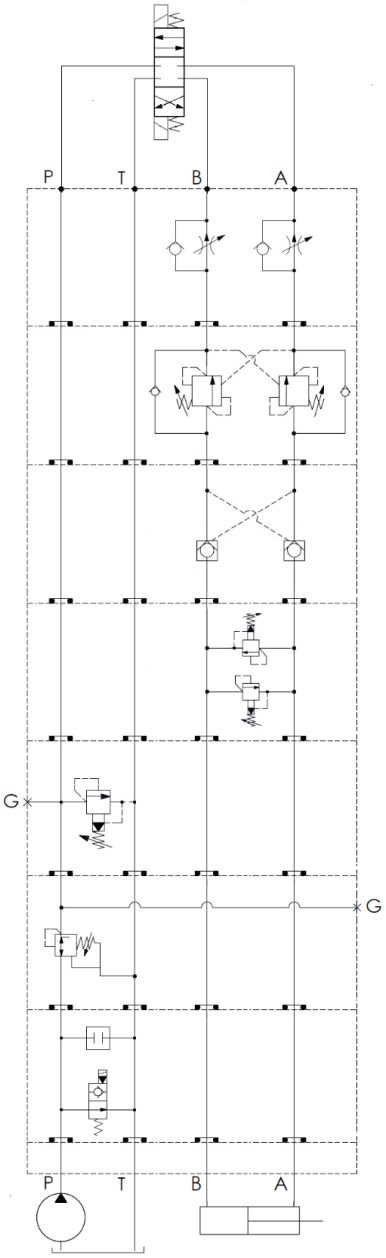

FUNCTION	MODEL CODE	CETOP	MAX GPM	HEIGHT (IN)	PSI RANGE
FLOW CONTROL METER "OUT"	MTCV-02-W-K	D03	9	1.57	-
	MTCV-03-W-K	D05	18	2.16	
COUNTERBALANCE VALVE (PILOT RATIO 3:1)	MH03CDW-CB3H-CB3H-A02	D03	10.5	1.75	1000 - 4000
	MH05CDW-CB3H-CB3H-A01	D05	21	1.95	2000 - 5000
LOCK VALVE (PILOT RATIO 3:1)	Z2S6	D03	13	1.57	-
	Z2S10	D05	21	1.97	
CROSS-OVER RELIEF (A - B)	MH03RDH-RP0A-RP0A-A01	D03	10.5	1.75	1000 - 3000
	MH05RDH-RP0A-RP0A-A01	D05	21	1.95	
PRESSURE RELIEF P TO T PORT	MRV-02-P-3	D03	10.5	1.75	100 - 3000
	MRV-03-P-3	D05	21	1.95	
PRESSURE REDUCING ON "P" PORT	MBRV-02-P-1	D03	9	1.57	100 - 1000
	MBRV-02-P-3				1000 - 3000
	MBRV-03-P-1	D05	18	2.16	100 - 1000
	MBRV-03-P-3				1000 - 3000
DERIVATIVE CIRCUIT	MH03RPJ-10A2-EP02*	D03	10.5	1.75	-
	MH05RPD-CP00-EP02*	D05	21	1.95	

* COIL MUST BE ORDERED SEPARATELY. USE EC04W MODEL

BOLT KITS

MODEL CODE	CETOP	LENGTH
MBK01-325	D03	1.57" + DIR. VLV.
MBK01-350		1.75" + DIR. VLV.
MBK01-490		1.57" + 1.57" + DIR. VLV.
MBK01-500		1.57" + 1.75" + DIR. VLV.
MBK01-525		1.75" + 1.75" + DIR. VLV.
MBK03-350	D05	1.95 OR 2.16" + DIR. VLV
MBK03-550		1.95" + 1.95" + DIR. VLV

- MADE OF ALUMINUM
- 3500 PSI MAXIMUM PRESSURE
- INCLUDES MOUNTING KIT
- RELIEF CAVITY C10-2
- SAE-06 PRESSURE GAUGE PORT

ALSO AVALABLE

- MORE STATIONS
- STEEL / CAST IRON
- TYPE OF CAVITY FOR RELIEF
- CUSTOMIZED BLOCKS

CETOP D03 MANIFOLDS

SERIE CIRCUIT

MODEL CODE	NUMBER OF STATIONS	PORT SIZE		DIM "L" (IN)	WEIGHT (LBS)
		P & T	A & B		
BMA03 S02 S08 C10-2	2	SAE-10	SAE-08	4.25	3.0
BMA03 S03 S08 C10-2	3			6.37	5.0
BMA03 S04 S08 C10-2	4			8.50	7.0

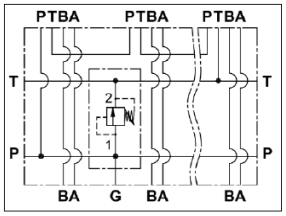

SERIES CIRCUIT WITH
OPTIONAL RELIEF VALVE SHOWN

PARALLEL CIRCUIT

MODEL CODE	NUMBER OF STATIONS	PORT SIZE		DIM "L" (IN)	WEIGHT (LBS)
		P & T	A & B		
BMA03 P02 S08 C10-2	2	SAE-10	SAE-08	4.25	3.0
BMA03 P03 S08 C10-2	3			6.37	5.0
BMA03 P04 S08 C10-2	4			8.5	7.0
BMA03 P05 S08 C10-2	5			10.63	9.0
BMA03 P06 S08 C10-2	6			12.75	11.0

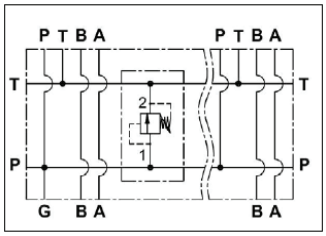

PARALLEL CIRCUIT WITH
OPTIONAL RELIEF VALVE SHOWN

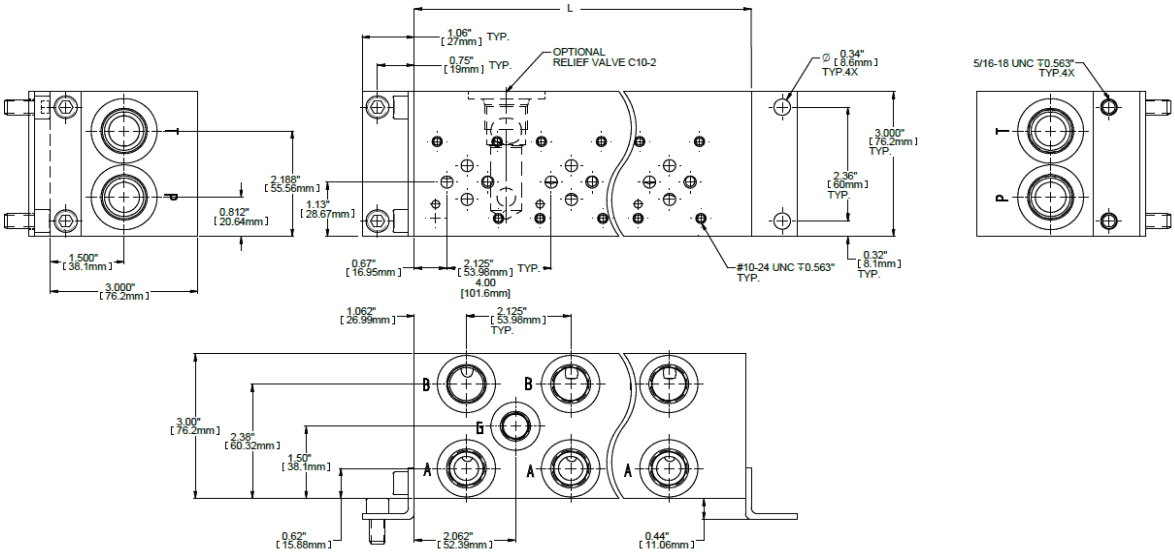

RELIEFS & CAVITY PLUG

MODEL CODE	DESCRIPTION
DE-RVP-00-4000	RELIEF 1000-4000 PSI
CAV-PLUG-10-2	CAVITY PLUG

CETOP D05 MANIFOLDS

SERIE CIRCUIT

MODEL CODE	NUMBER OF STATIONS	PORT SIZE		DIM "L" (IN)	WEIGHT (LBS)
		P & T	A & B		
BMA05 S02 S10 C10-2	2	SAE-12	SAE-10	6.75	6.6
BMA05 S03 S10 C10-2	3			9.75	10.0
BMA05 S04 S10 C10-2	4			13.0	13.3

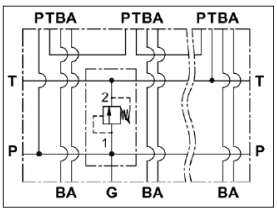

SERIES CIRCUIT WITH
OPTIONAL RELIEF VALVE SHOWN

PARALLEL CIRCUIT

MODEL CODE	NUMBER OF STATIONS	PORT SIZE		DIM "L" (IN)	WEIGHT (LBS)
		P & T	A & B		
BMA05 P02 S10 C10-2	2	SAE-12	SAE-10	6.50	6.6
BMA05 P03 S10 C10-2	3			9.75	10.0
BMA05 P04 S10 C10-2	4			13.00	13.3
BMA05 P05 S10 C10-2	5			16.25	16.6

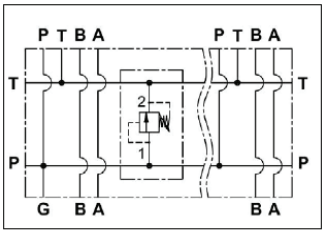

PARALLEL CIRCUIT WITH
OPTIONAL RELIEF VALVE SHOWN

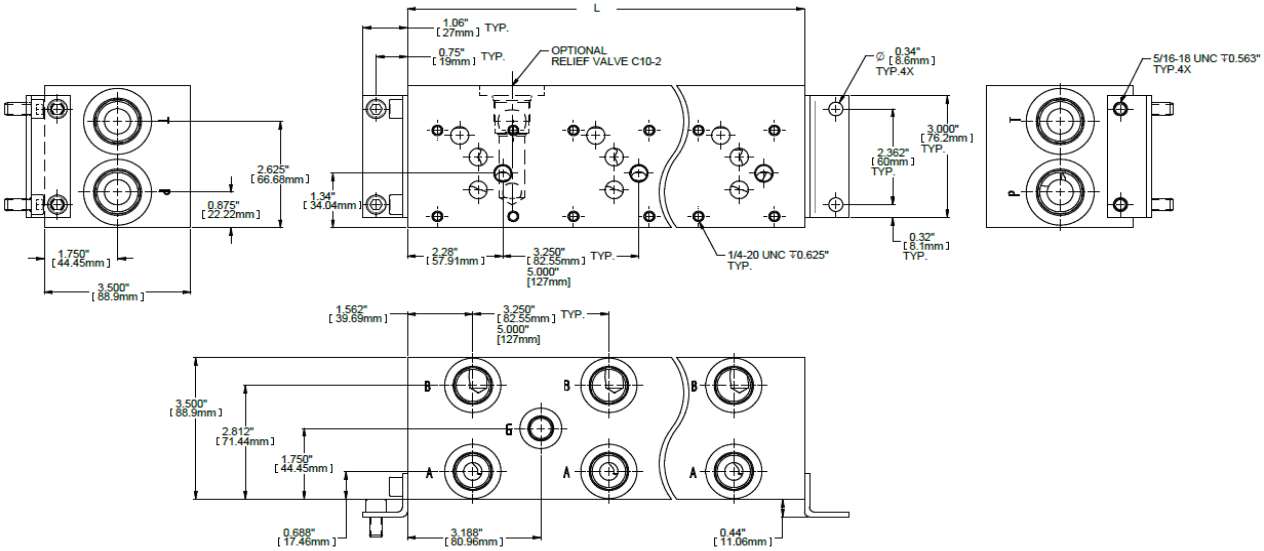

RELIEF & CAVITY PLUG

MODEL CODE	DESCRIPTION
DE-RVP-00-4000	RELIEF 1000-4000 PSI
CAV-PLUG-10-2	CAVITY PLUG

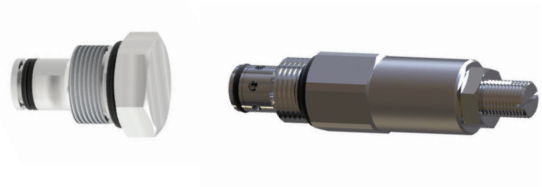

COVER PLATES

MODEL CODE	CETOP	DESCRIPTION
CPA03-XX	D03	ALL PORTS BLOCKED
CPA03-PT		OIL PASSAGE FROM P TO T
CPA05-XX	D05	ALL PORTS BLOCKED
CPA05-PT		OIL PASSAGE FROM P TO T

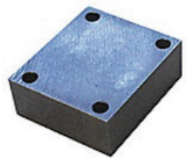

GENERAL SPECIFICATIONS

FEATURES AND BENEFITS
- HYDRAULIC CIRCUIT AND BLOCKS DESIGNED IN NORTH AMERICA
- ONE MANUFACTURE IN NORTH AMERICA
- SUN AND COMMON CAVITIES (OTHER ON REQUEST)
- POSSIBLE TO INTEGRATE CETOP AND SECTIONAL VALVES

FLOW REGULATOR FOR AUXILIARY CIRCUIT

CUSTOMIZED INTEGRATED PRODUCT

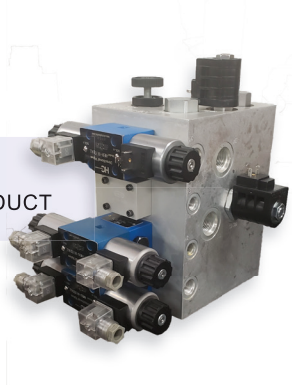

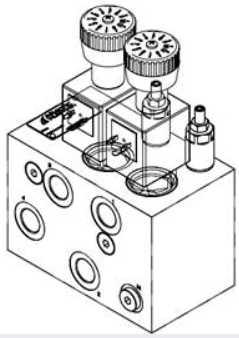

SALT SPRAYER VALVES

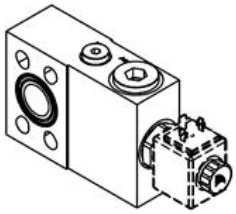

EXCAVATOR VALVES

AUXILIAIRY QUICK HITCH

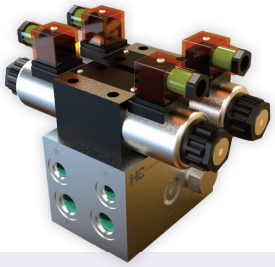

CUSTOMIZED INTEGRATED PRODUCT

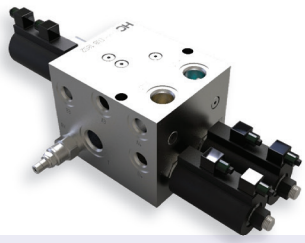

CUSTOMIZED INTEGRATED PRODUCT

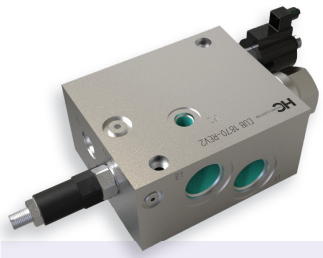

REGENERATION BLOC

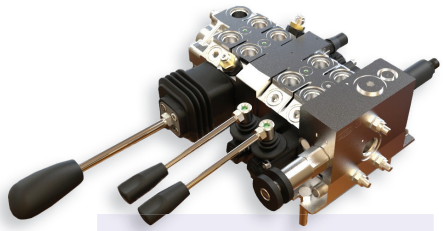

CUSTOMIZED INTEGRATED PRODUCT

PRESSURE REDUCING BLOCK

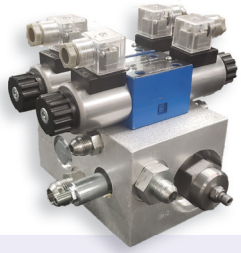

STREET BRUSH BLOCK

2 WAY, 2 POSITION, NORMALLY CLOSED

MODEL CODE	MAX GPM	MAX PSI	CAVITY	COIL	CIRCUIT	WEIGHT (LBS)
PB-S2B-00	8	3500	C8-2	P	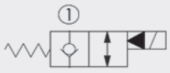	0.2
EP08W2A05M05	10	5000		EC04W		0.3
DE-S2B-00	15	3500	C10-2	D		0.3
EP10W2A05M05	17.5	5000		EC04W		0.4
TT-S2B-00	25	3000	C12-2	D		0.5
EP12W2A05M05	37.5	5000		EC04W		0.5
SJ-S2B-00	30	3500	C16-2	D		0.7
EP16W2A05M05	37.5	5000		EC04W		0.7
DE-S2I-00	4	3000	C10-2	D	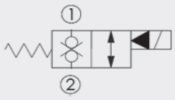	0.3
EP08W2A31M05	10	5000	C8-2	EC04W		0.3
EP10W2A31M05	17.5	5000	C10-2			0.4
EP16W2A31M05	37.5	5000	C16-2			0.7

2 WAY, 2 POSITION, NORMALLY OPEN

MODEL CODE	MAX GPM	MAX PSI	CAVITY	COIL	CIRCUIT	WEIGHT (LBS)
PB-S2D-00	10	3500	C8-2	P	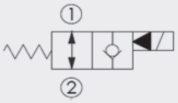	0.2
EP08W2A06T05	10	5000		EC04W		0.3
DE-S2D-00	15	3500	C10-2	D		0.3
EP10W2A06P05	17.5	5000		EC04W		0.4
TT-S2D-00	30	3000	C12-2	D		0.5
EP12W2A06P05	37.5	5000		EC04W		0.5
SJ-S2D-00	40	3000	C16-2	D		0.7
EP16W2A06P05	37.5	5000		EC04W		0.7
EP08W2A32P05	10	5000	C8-2	EC04W	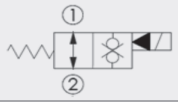	0.3
EP10W2A32P05	17.5	5000	C10-2			0.4
EP16W2A32P05	37.5	5000	C16-2			0.7

3 WAY, 2 POSITION

MODEL CODE	MAX GPM	MAX PSI	CAVITY	COIL	CIRCUIT	WEIGHT (LBS)
ES08W3A11N04	2.5	3000	C8-3	EC04W	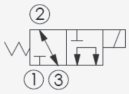	0.3
DF-S3A-00	10	3000	C10-3	D	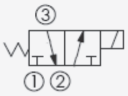	
TYPICALLY USED FOR SINGLE ACTING CYLINDER						
DF-S3B-00	8	3000	C10-3	D	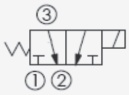	
TYPICALLY USED AS A SELECTOR						

4 WAY, 2 POSITION

MODEL CODE	MAX GPM	MAX PSI	CAVITY	COIL	CIRCUIT	WEIGHT (LBS)
ES08W4A10N04	3	3000	C8-4	EC04W	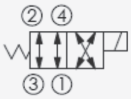	0.3
DG-S4A-00	10		C10-4	D		
ES08W4A11N04	4	3000	C8-4	EC04W	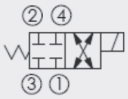	
DG-S4B-00	10		C10-4	D		

BODIES

- MADE OF ALUMINUM
- 3000 PSI MAXIMUM PRESSURE

MODEL CODE	CAVITY	PORT SIZE	DIMENSIONS (IN)						WEIGHT (LBS)
			A	B	C	D	E	F	
30102466	C8-2	SAE-06	2.00	2.00	1.25	1.50	1.50	1.50	0.4
30102359	C10-2	SAE-08	2.12	2.00	1.50	1.75	0.50	0.28	0.6
30102364		SAE-06							
30102813	C12-2	SAE-12	3.09	2.75	1.75	2.20	0.84	0.41	1.1
30102331	C16-2	SAE-12	3.00	3.00	2.00	2.44	0.75		1.8
30102533	C8-3	SAE-06	2.50	2.25	1.25	1.75	0.25	0.28	0.7
30102354	C10-3	SAE-08	2.50	2.50	1.50	2.25	0.38		1.1
30102535	C8-4	SAE-06	3.00	2.25	1.25	1.75	0.50	0.28	0.9
30102367	C10-4	SAE-08	3.25	2.50	1.50	2.25	0.38		1.0

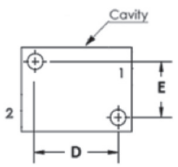

C8-2 BODY

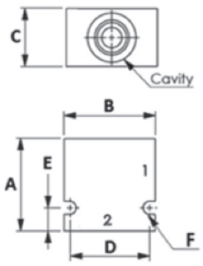

C10-2 TO C16-2 BODIES

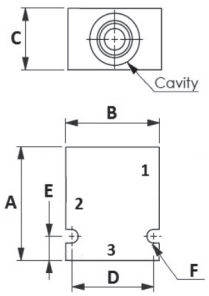

C8-3 AND C10-3 BODIES

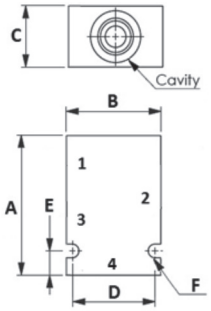

C8-4 AND C10-4 BODIES

COILS

- DIN CONNECTOR MODELS
- OTHER VOLTAGE AND TYPES AVAILABLE

MODEL CODE	VOLTAGE	WATTS	DIMENSIONS (IN)			WEIGHT (LBS)
			INSIDE	HEIGHT	WIDTH	
P-HC-12	12 VDC	19	1/2"	1.78	1.25	0.7
P-HC-24	24 VDC					
P-HC-11	110 VAC					
D-HC-12	12 VDC	22	1/2"	2.03	1.56	0.7
D-HC-24	24 VDC					
D-HC-11	110 VAC					
L-HC-12	12 VDC	22	5/8"	2.03	1.56	0.7
L-HC-24	24 VDC					
L-HC-11	110 VAC					
T-HC-12	12 VDC	28	3/4"	1.96	2.38	0.9
T-HC-24	24 VDC					
T-HC-11	110 VAC					
EC04W-200HE	12 VDC	20	1/2"	1.41	1.51	0.5
EC04W-200HD	24 VDC					
EC04W-200HB*	110 VAC					

* MUST BE USED WITH A DIN CONNECTOR, RECTIFIER

DIN CONNECTORS

MODEL CODE	DESCRIPTION
43650A-DC-BLK	NO LED
ED30R01A	LED, RECTIFIER (AC TO DC)
43650A-DC-LED	LED, 12V/ 24V DC/AC
43650A-110AC-LED	LED, 110V DC/AC

3 WAY DIVERTERS

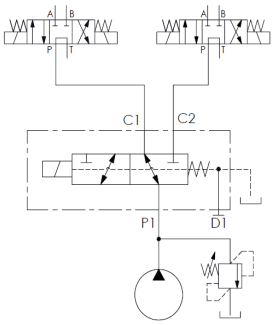

TYPICAL APPLICATION

VS 95

MODEL CODE	MAX GPM	MAX PSI	PORT SIZE	VOLTAGE	TRANSITION	CIRCUIT
VS85-A-12VDC	16	3625	SAE-08	12 VDC	CLOSED	C1 C2 P ES & VS MODELS
VS85-A-24VDC				24 VDC		
HVC-3/2-10-N-S08-12	21	3000		12 VDC		
HVC-3/2-10-N-S08-24				24 VDC		
VS95-A-12VDC	37	3625	SAE-12	12 VDC		B A P HVC MODEL
ES000314						
VS95-A-24VDC				24 VDC		
ES000315						
VS85-D-12VDC	16	3625	SAE-08	12 VDC	CLOSED	C1 C2 P
VS85-D-24VDC				24 VDC		
VS95-D-12VDC	37	3625	SAE-12	12 VDC		
VS95-D-24VDC				24 VDC		

DIMENSIONS

ES

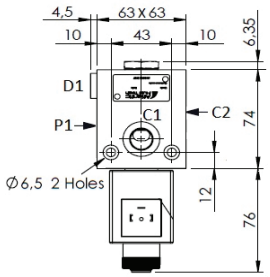

HVC

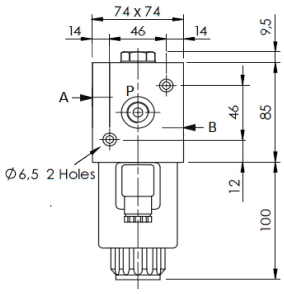

VS85

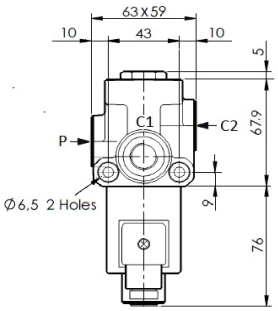

VS95

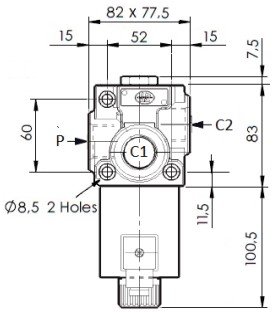

COILS

- DIN CONNECTOR MODELS
- OTHER VOLTAGE & TYPE OF CONNECTORS AVAILABLE

MODEL CODE	VOLTAGE	FITS ON
271-0520	12 VDC	VS85, VS155 & VS245F
271-0521	24 VDC	
281-0617	12 VDC	VS95, VS315 & VS285F
281-0618	24 VDC	
AB000167	12 VDC	ES000312 / 318 / 320
AB000168	24 VDC	ES000313 / 319 / 321

MODEL CODE	VOLTAGE	FITS ON
4WE6-12VDC COIL DIN	12 VDC	KVH, 2KVH & MOP
4WE6-24VDC COIL DIN	24 VDC	
4WE10-12VDC COIL DIN	12 VDC	HVC-3/2 & SVK10
4WE10-24VDC COIL DIN	24 VDC	
AB000156	12 VDC	ES000314 / 316
AB000157	24 VDC	ES000315 / 317

6 WAYS DIVERTERS

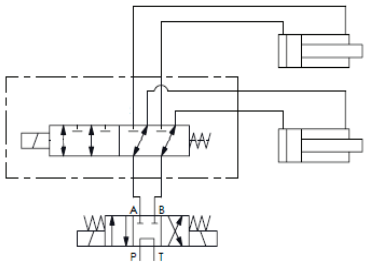

TYPICAL APPLICATION

VS 315

MODEL CODE	MAX GPM	MAX PSI	PORT SIZE	VOLTAGE	TRANSITION	CIRCUIT
KVH6-S08-DC1200	13	3625	SAE-08	12 VDC	CLOSED	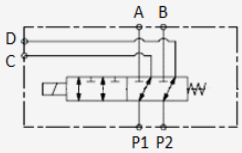 KVH MODELS
ES000320						
KVH6-S08-DC2400				24 VDC		
ES000321						
ES000479		4500	SAE-08	24 VDC*	OPEN	
VS155-12VDC	16	3625		12 VDC	CLOSED	
VS155-24VDC				24 VDC		
ES000473	26	4500	SAE-10	24 VDC*	OPEN	
ES000316	37	3625	SAE-12	12 VDC	CLOSED	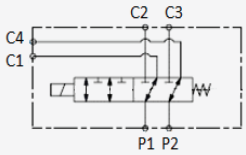 ES & VS MODELS
VS315-12VDC						
ES000317				24 VDC		
VS315-24VDC						
ES000307	47	4500	SAE-12	24 VDC*	CLOSED	
ES000477					OPEN	

* DEUTSCH DT04-2P CONNECTOR

DIMENSIONS

ES320/321

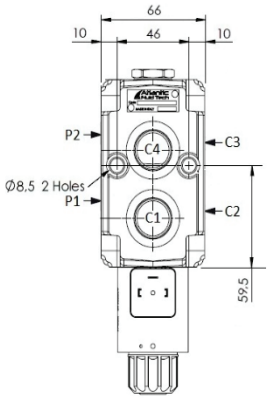

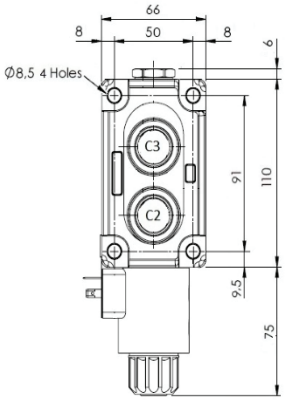

VS155

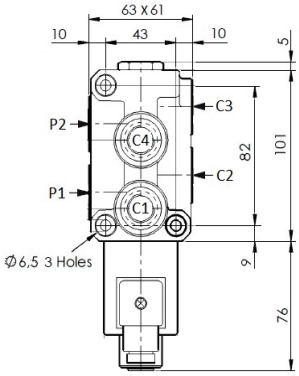

KVH

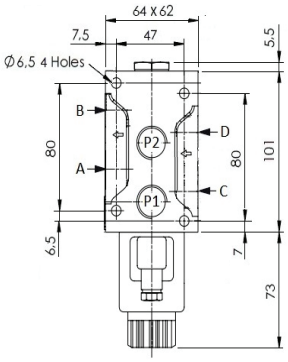

ES316/317

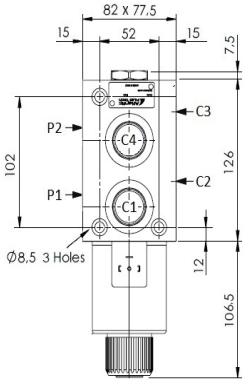

VS315

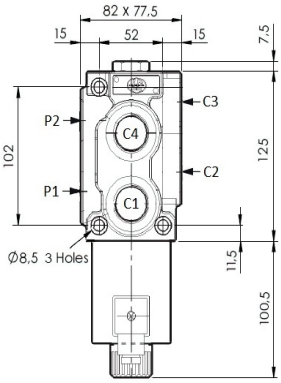

DIVERTERS 8 WAYS - MONOBLOCK

• CLOSED CENTER IN TRANSITION

MODEL CODE	MAX GPM	MAX PSI	PORT SIZE	VOLTAGE
2KVH6-DC12-S08	13.5	3625	SAE-08	12 VDC
2KVH6-DC24-S08				24 VDC

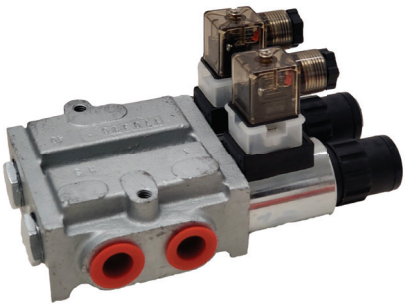

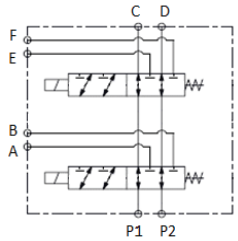

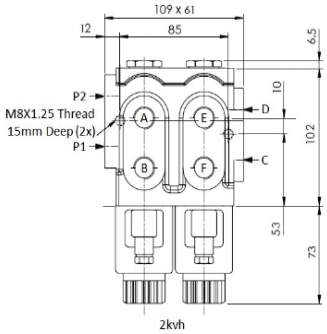

DIVERTERS 6 WAYS - STACKABLE

• CLOSED CENTER IN TRANSITION

MODEL CODE	MAX GPM	MAX PSI	PORT SIZE	VOLTAGE
VS125F-12VDC	6.5	3625	SAE-04	12 VDC
MOP066-S08-I1-DC12	13.5	3625	SAE-08	12 VDC
MOP066-S08-I1-DC24				24 VDC
VS245F-12VDC	13.5	3625	SAE-08	12 VDC
VS245F-24VDC				24 VDC
ES000318	13.5	3625	SAE-08	12 VDC
ES000319				24 VDC
ES000312	13.5	3625	SAE-10	12 VDC
ES000313				24 VDC
SVK10-DC12-S10-N1	21	3625	SAE-10	12 VDC
SVK10-DC24-S10-N1				24 VDC
VS285F-12VDC	24	3625	SAE-10	12 VDC
VS285F-24VDC				24 VDC

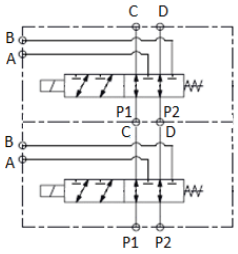

MOP & SKV MODELS
8 WAYS SHOWN

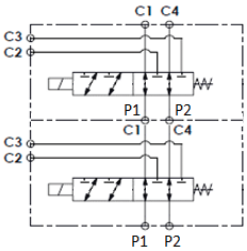

ES & VS MODELS
8 WAYS SHOWN

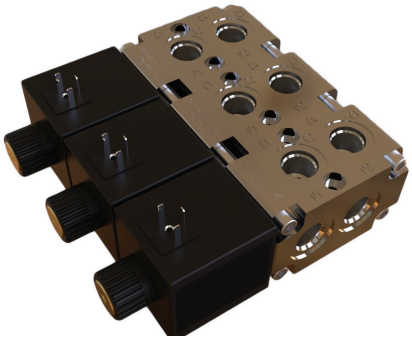

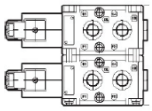

8 ways

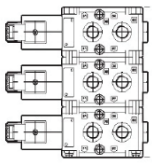

10 ways

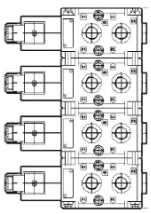

12 ways

DIMENSIONS

SKV 8 WAYS

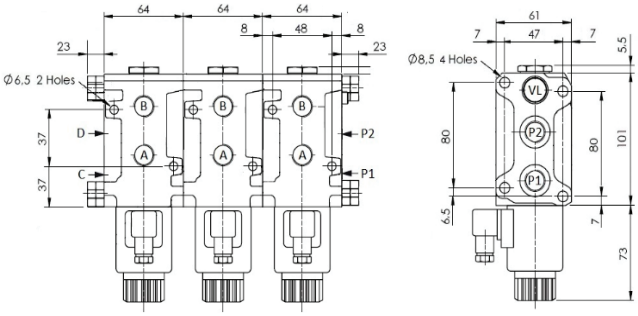

MOP 10 WAYS

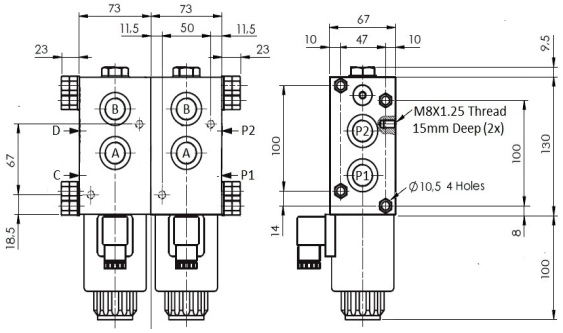

VS285F 8 WAYS

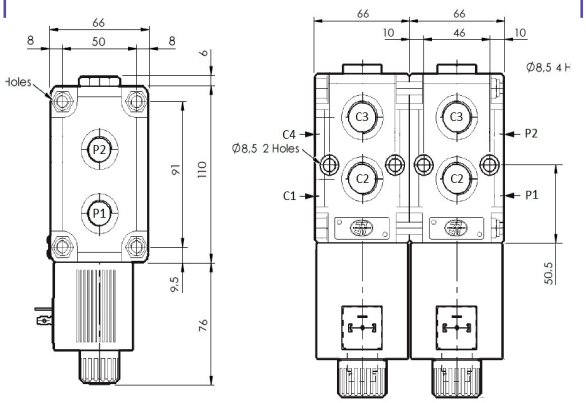

ES 8 WAYS

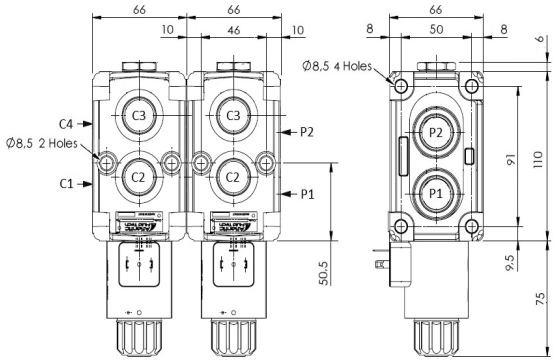

VS245F 8 WAYS

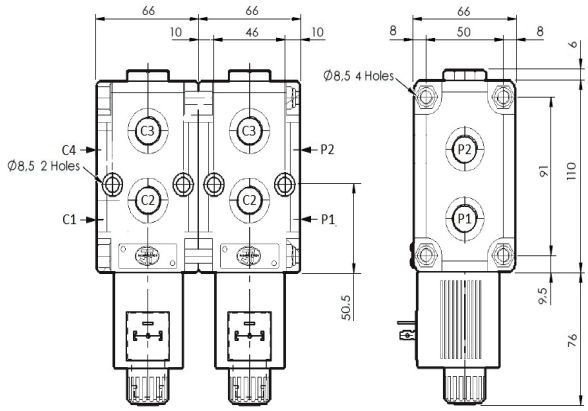

ELECTRIC HANDLES

- CABLES TERMINAL SUPPLIED WITHOUT LEAD-IN WIRE
- MAX CURRENT ON CONTACTS : 3 AMPERE
- SAFETY PUSH BUTTON ON REQUEST
- ELECTRICAL LIFE : 10^6 CYCLES (1 CYCLE = 2 SEC. “ON” / 2 SEC. OFF WITH CURRENT = 3A VOLTAGE = 12VDC AND WITH ARC SUPPRESSOR DIODE) 10^5 CYCLES IF USED WITH CURRENT = 3A VOLTAGE = 12VDC AND WITH DIRECT CONNECTION

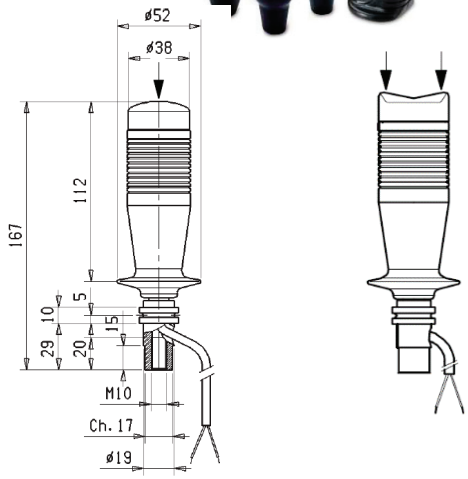

ECONOMIC HANDLES

MODEL CODE	DESCRIPTION
G9466012331	1 CONTACT
G9466012351	2 CONTACTS
E9634005553	2 DETENTS

ERGONOMICAL HANDLES

NUMBER OF PUSH BUTTONS			
E9634006903	E9634006893	E9634006923	E9634006913
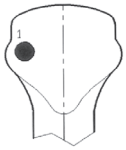	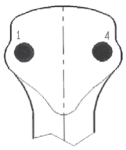	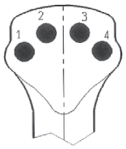	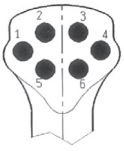

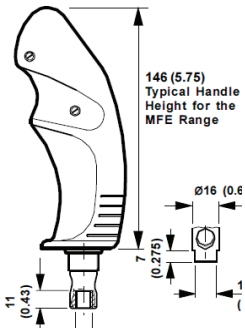

3 WAYS PUSH-PULL DIVERTERS

- DIRECTS THE FLOW OF OIL INTO TWO SEPARATE HYDRAULIC CIRCUITS
- OPEN CENTER IN TRANSITION
- SHIFT VALVE BEFORE PRESSURE IS APPLIED

SS MODELS

SV MODELS

BAILEY PART NO	MODEL CODE	PORT SIZE	MAX PSI	MAX GPM	WEIGHT (LBS)
222999	SS-2A1D	1/2 NPT	2500	20	4.0
223005	SS-3A1D	SAE-08			
220936	SV80-A-S8-K	SAE-08	3000	20	3.2
220937	SV120-A-S12-K	SAE-12		30	5.4

6 WAYS PUSH-PULL DIVERTERS - PRINCE

- DIRECTS THE FLOW OF OIL INTO TWO SEPARATE HYDRAULIC CIRCUITS
- OPEN CENTER IN TRANSITION

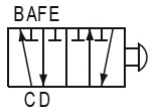

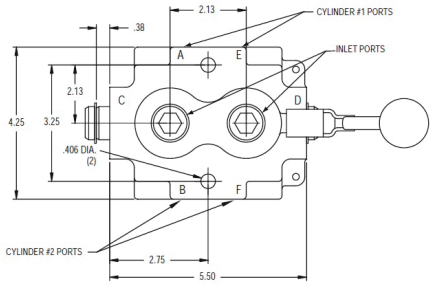

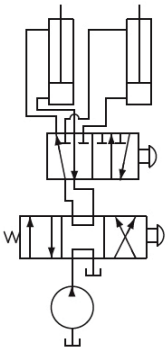

BAILEY PART NO	MODEL CODE	PORT SIZE	MAX PSI	MAX GPM	WEIGHT (LBS)
222996	DS-1A1E	1/2 NPT	2500	20	9.0
222998	DS-4A1E	3/4 NPT		40	

3 WAYS ROTARY DIVERTERS

- CLOSED TRANSITION
- OPEN TRANSITION ALSO AVAILABLE

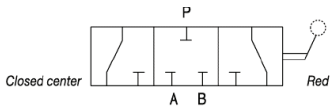

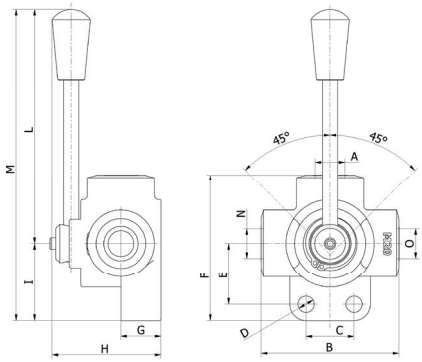

MODEL CODE	PORT SIZE	MAX PSI	MAX GPM	DIMENSIONS (IN)									WEIGHT (LBS)
				B	C	D	E	F	G	H	L	M	
FD3W-02-C-S	SAE-08	5000	16	2.76	1.0	0.33	1.26	2.97	0.83	2.24	4.53	6.12	1.7
FD3W-03-C-S	SAE-10		24	3.15	1.26	0.33	1.42	3.39	0.94	2.48	4.53	6.34	2.6
FD3W-04-C-S	SAE-12		32	3.54	1.26	0.41	1.65	3.88	1.02	2.64	4.53	6.63	3.9

6 WAYS ROTARY DIVERTERS

- CLOSED TRANSITION
- OPEN TRANSITION ALSO AVAILABLE

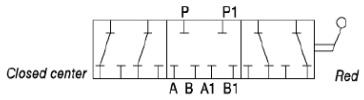

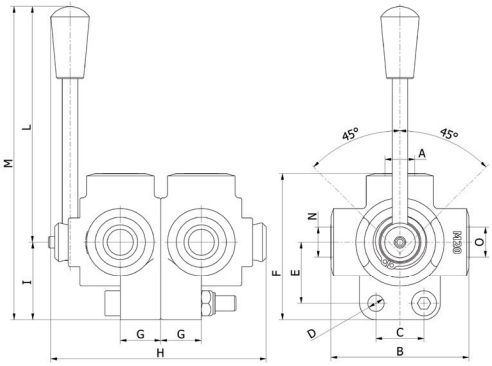

MODEL CODE	PORT SIZE	MAX PSI	MAX GPM	DIMENSIONS (IN)									WEIGHT (LBS)
				B	C	D	E	F	G	H	L	M	
FD6W-02-C-S	SAE-08	5000	16	2.76	1.0	0.33	1.26	2.97	0.83	4.41	4.53	6.12	3.3
FD6W-03-C-S	SAE-10		24	3.15	1.26	0.33	1.42	3.39	0.94	4.88	4.53	6.34	5.0
FD6W-04-C-S	SAE-12		32	3.54	1.26	0.41	1.65	3.88	1.02	5.20	4.53	6.63	7.7

HIGH PRESSURE BALL VALVES

- ZINC PLATED STEEL BODY
- TEMPERATURE: -25 TO 100°C

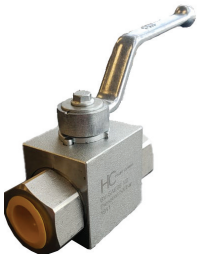

BV2HL WITH LOCKING DEVICE

2 WAY

BAILEY PART NO	MODEL CODE	PORT SIZE	MAX PSI
450265	BV2H-04N	1/4 NPT	7250
450267	BV2H-06N	3/8 NPT	
450270	BV2H-08N	1/2 NPT	
450273	BV2H-12N	3/4 NPT	4500
450276	BV2H-16N	1" NPT	
450266	BV2H-04S	SAE-04	7250
450268	BV2H-06S	SAE-06	
450271	BV2H-08S	SAE-08	
450274	BV2H-12S	SAE-12	4500
450277	BV2H-16S	SAE-16	
450269	BV2HL-06S	SAE-06	7250
450272	BV2HL-08S	SAE-08	
450275	BV2HL-12S	SAE-12	4500

3 WAY

BAILEY PART NO	MODEL CODE	PORT SIZE	MAX PSI
450278	BV3H-06N	3/8 NPT	7250
450280	BV3H-08N	1/2 NPT	
450282	BV3H-12N	3/4 NPT	4500
450284	BV3H-16N	1" NPT	
450279	BV3H-06S	SAE-06	7250
450281	BV3H-08S	SAE-08	
450283	BV3H-12S	SAE-12	4500
450285	BV3H-16S	SAE-16	

IN-LINE CHECK VALVES

- FREE FLOW IN ONE DIRECTION ONLY
- MATERIAL: ZINC PLATED STEEL BODY

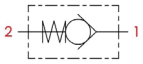

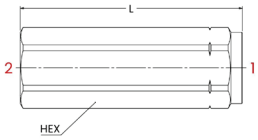

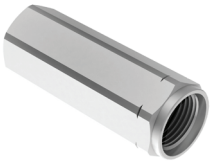

BAILEY PART NO	MODEL CODE	PORT SIZE	MAX PSI	MAX GPM	DIMENSIONS		WEIGHT (LBS)
					L (IN)	HEX (MM)	
7 PSI CRACKING PRESSURE							
280400	CV-04N	1/4 NPT	5800	8	2.28	19	0.22
280402	CV-06N	3/8 NPT	5800	12	2.71	22	0.4
280404	CV-08N	1/2 NPT	5800	18.5	2.95	27	0.5
280406	CV-12N	3/4 NPT	5800	29	3.48	35	1.0
280408	CV-16N	1" NPT	5075	42	4.33	41	1.6
280410	CV-06S	SAE-06	5800	8	2.71	22	0.2
280411	CV-08S	SAE-08	5800	13	2.95	27	0.4
280412	CV-12S	SAE-12	5800	24	3.48	35	1.0
65 PSI CRACKING PRESSURE							
280401	CV-04N-65	1/4 NPT	5800	8	2.28	19	0.22
280403	CV-06N-65	3/8 NPT	5800	12	2.71	22	0.4
280405	CV-08N-65	1/2 NPT	5800	18.5	2.95	27	0.5
280407	CV-12N-65	3/4 NPT	5800	29	3.48	35	1.0
280409	CV-16N-65	1" NPT	5075	42	4.33	41	1.6

CARTRIDGE TYPE CHECK VALVES

- FREE FLOW IN ONE DIRECTION ONLY

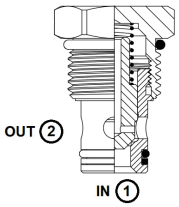

FREE FLOW NOSE TO SIDE

MODEL CODE	MAX GPM	MAX PSI	CRACKING PSI	CAVITY
MA-CVA-00-0005	5	3500	5	C7-2
CV08W-2007-N	8	3500	10	C8-2
CV08W-2041N			60	
PB-CVC-00-0005	10	3500	5	
CV162A-2020N	10	5000	30	T-162A
DE-CVA-00-0005	15	3500	5	C10-2
CV10W-2003N				
DE-CVA-00-0035			35	
DE-CVA-00-0090			90	
HE-CVA-00-0150		5000	150	

MODEL CODE	MAX GPM	MAX PSI	CRACKING PSI	CAVITY
SJ-CVA-00-0005	40	3500	5	C16-2
SJ-CVA-00-0030			30	
CV5A-2003N	42	5000	4	T-5A
CV5A-2020N			30	
CV5A-2050N			75	
CV16A-2003N	84	5000	4	T-16A
CV16A-2010N			15	
CV16A-2020N			30	
CV16A-2070N			100	

REVERSE (FREE FLOW SIDE TO NOSE)

MODEL CODE	MAX GPM	MAX PSI	CRACKING PSI	CAVITY
CV162A-2103N	8	5000	4	T-162A
DE-CVR-00-0005	15	3500	5	C10-2
CV16A-2120N	63	5000	30	T-16A
CV16A-2135N			60	

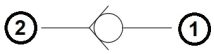

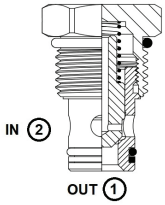

LINE MOUNT BODIES

- MATERIAL: ANODIZED ALUMINUM
- 3000 PSI MAXIMUM PRESSURE
- DUCTILE IRON AVAILABLE ON DEMAND

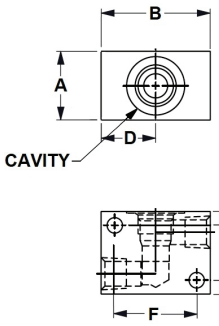

C8-2 CAVITY

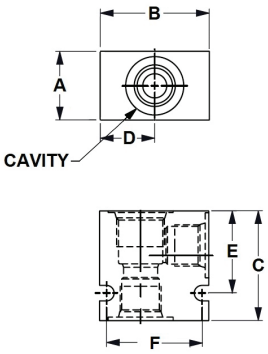

C10-2 & C16-2 CAVITIES

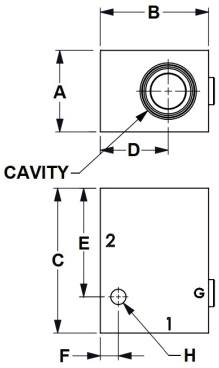

T-* CAVITIES

MODEL CODE	CAVITY	PORT SIZE	DIMENSIONS (INCHES)							
			A	B	C	D	E	F	G	H
30102466	C8-2	SAE-06	1.25	2.0	2.0	1.125	1.5	1.5		
30102364	C10-2	SAE-06	1.5	2.0	2.0	1.25	1.5	1.75		
30102359		SAE-08								
30102331	C16-2	SAE-12	2.0	3.0	3.0	1.875	2.25	2.438		
ML-162A2-S06-A01	T-162A	SAE-06	1.0	1.50	2.0	1.0	1.72	0.28		0.28
ML-5A2-S08-A01	T-5A	SAE-08	1.5	2.0	2.625	1.5	2.25	0.375		0.42
ML-5A2-S10-A01		SAE-10								
ML-16A2-S12G-A01	T-16A	SAE-12	2.25	3.0	4.0	1.88	3.0	0.5	1/4 NPT	0.42
ML-16A2-S16G-A01		SAE-16								

SHUTTLE VALVES - HYDRO-CUSTOM

• MATERIAL: ZINC PLATED STEEL BODY

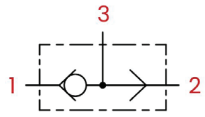

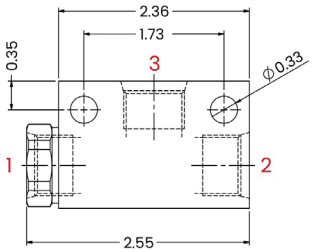

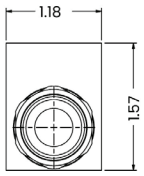

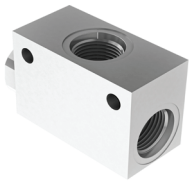

BAILEY PART NO	MODEL CODE	PORT SIZE	MAX PSI	MAX GPM	WEIGHT (LBS)
280419	SHV-06S	SAE-06	5075	7.9	0.65

SINGLE PILOT OPERATED CHECK VALVES - HYDRO-CUSTOM

• MATERIAL: ZINC PLATED STEEL BODY

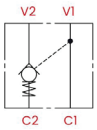

LVS MODEL

LVSF MODEL

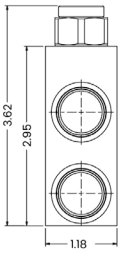

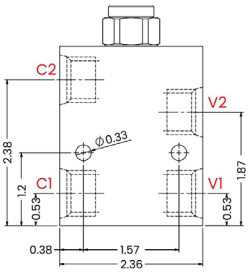

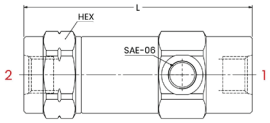

BAILEY PART NO	MODEL CODE	PORT SIZE	MAX PSI	MAX GPM	PILOT RATIO	CRACKING PSI	WEIGHT (LBS)
280413	LVS-08S	SAE-08	5075	9.2	7 : 1	65	1.9
280414	LVSF-08S			10.6	5 : 1		2.3

SINGLE PILOT OPERATED CHECK VALVES - DELTA-POWER & PRINCE

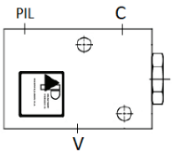

PS MODEL

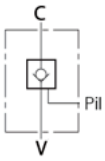

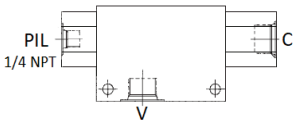

RD-1650 MODEL

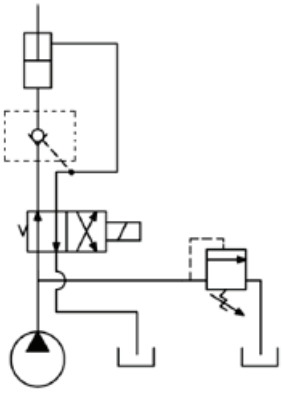

BAILEY PART NO	MODEL CODE	PORT SIZE	MAX PSI	MAX GPM	PILOT RATIO	WEIGHT (LBS)
	PS-POC-BS	SAE-06	3000	10	4:1	1.0
222180	RD-1650	1/2 NPT	3000	20	4:1	2.0

DOUBLE PILOT OPERATED CHECK VALVES - HYDRO-CUSTOM

• MATERIAL: ZINC PLATED STEEL BODY

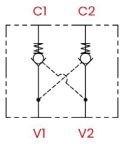

LVD MODELS

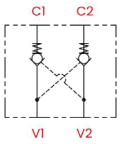

LVDF MODELS

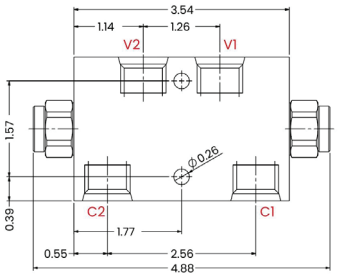

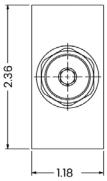

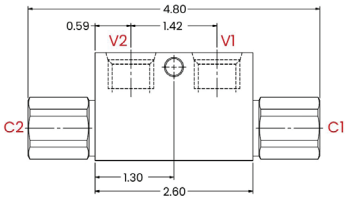

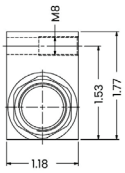

BAILEY PART NO	MODEL CODE	PORT SIZE	MAX PSI	MAX GPM	PILOT RATIO	CRACKING PSI	WEIGHT (LBS)
280415	LVDF-06S	SAE-06	5075	5.3	5.5 : 1	65	1.4
280417	LVD-06S				3.3 : 1		2.9
280416	LVDF-08S	SAE-08	5075	9.2	5.5 : 1	65	1.3
280418	LVD-08S				3.3 : 1		2.6

DOUBLE PILOT OPERATED CHECK VALVES

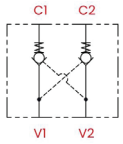

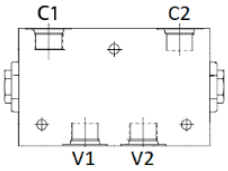

RD-1450

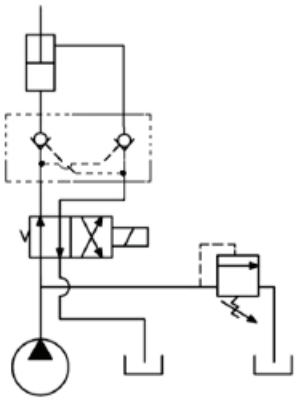

BAILEY PART NO	MODEL CODE	PORT SIZE	MAX PSI	MAX GPM	PILOT RATIO	WEIGHT (LBS)
	PD-POC-BS	SAE-06	3000	10	4:1	1.2
222574	RD-1450	1/2 NPT	3000	30	4:1	7.0

COUNTEBALANCE VALVES ARE USED TO KEEP A LOAD LOCKED. THE BUILT-IN RELIEF CONTROL THE LOAD AND LIMIT THE PRESSURE IN THE ACTUATOR. SINCE THESE 2 MODELS ARE ATMOSPHERICALLY VENTED, THEY ARE NOT AFFECTED BY BACK PRESSURE SO THEY CAN BE USED IN A SYSTEM USING DIRECTIONAL VALVES THAT HAS PORTS CLOSED IN NEUTRAL POSITION.

IN THIS CASE, THE LOCK FUNCTION WORKS HOWEVER IT LOSES HIS RELIEF FUNCTION IN NEUTRAL POSITION. IF THEY ARE USED WITH DIRECTIONAL VALVES THAT HAS OPEN PORTS IN NEUTRAL POSITION, THEY WORK EXACTLY AS A REGULAR COUNTERBALANCE VALVE.

SINGLE COUNTERBALANCE VALVES

• MATERIAL: ZINC PLATED STEEL BODY

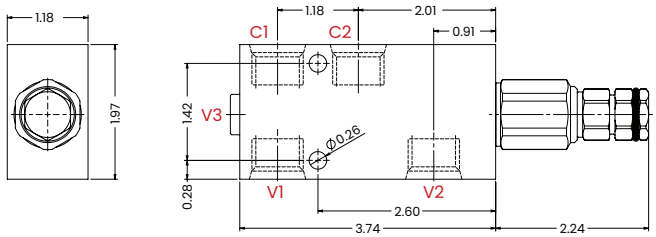

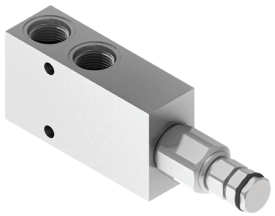

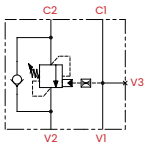

BAILEY PART NO	MODEL CODE	PORT SIZE	MAX PSI	MAX GPM	PSI RANGE	PILOT RATIO	WEIGHT (LBS)
280420	SCBC-08S-30	SAE-08	5075	10	435 - 3045	4:1	2.0

DUAL COUNTERBALANCE VALVES

• MATERIAL: ZINC PLATED STEEL BODY

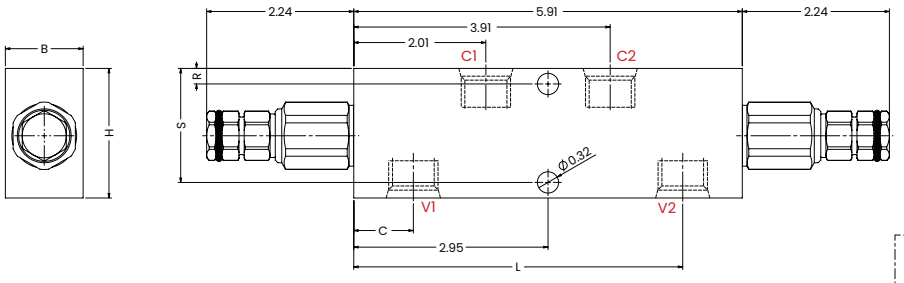

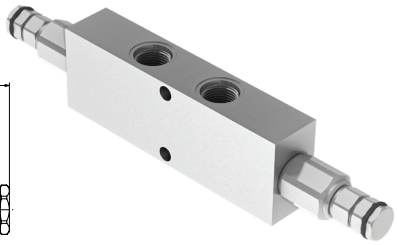

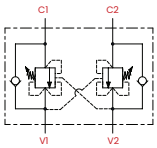

BAILEY PART NO	MODEL CODE	PORT SIZE	MAX PSI	MAX GPM	PSI RANGE	PILOT RATIO	WEIGHT (LBS)
280422	DCBC-08S-30	SAE-08	5075	10	435 - 3045	4:1	2.0

PILOT OPERATED CHECK VALVES - WINNER

MODEL CODE	MAX PSI	MAX GPM	CAVITY	PILOT RATIO	WEIGHT (LBS)
CO08W3-317N	5000	8	C8-3	3:1	0.4
CO11A-30-20N		15	T-11A		0.3
CO2A-30-20N		30	T-2A		0.5
CO17A-30-20N		60	T-17A		1.1
CO19A-30-20N		120	T-19A		2.6

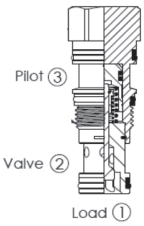

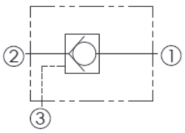

COUNTERBALANCE VALVES

MODEL CODE	MAX PSI	MAX GPM	CAVITY	PSI RANGE	PILOT RATIO	WEIGHT (LBS)
CB11A-33-I-L	4000	15	T-11A	360 - 1500	3:1	0.34
CB11A-33-H-L*				1000 - 4000		
CB11A-3C-H-L*						
CB11A-34-K-L	5000			1000 - 2500	4.5:1	
CB11A-34-J-L				2000 - 5000		
CB11A-30-K-L				1000 - 2500	10:1	
CB11A-30-J-L				2000 - 5000		
CB2A-33-I-L	4000	30	T-2A	360 - 1500	3:1	0.6
CB2A-3C-H-L*				1000 - 4000		
CB2A-33-H-L						
CB2A-34-K-L	5000			1000 - 2500	4.5:1	
CB2A-34-J-L				2000 - 5000		
CB2A-30-J-L					10:1	
CB17A-3C-I-L	4000	60	T-17A	360 - 1500	3:1	1.3
CB17A-3C-H-L				1000 - 4000		
CB17A-3D-J-L	5000			2000 - 5000	4.5:1	
CB17A-3J-J-L					10:1	
CB19A-3C-H-L*	4000	120	T-19A	1000 - 4000	3:1	3.0
CB19A-3D-K-L	5000			1000 - 2500	10:1	
CB19A-3J-J-L				2000 - 5000		

* SEALED PILOT

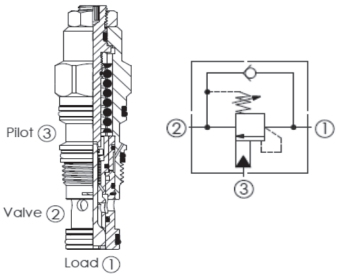

LINE MOUNT BODIES

- MATERIAL: ANODIZED ALUMINUM
- 3000 PSI MAXIMUM PRESSURE
- DUCTILE IRON AVAILABLE ON DEMAND

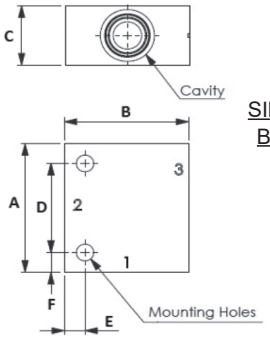

SINGLE BODY

DOUBLE BODY

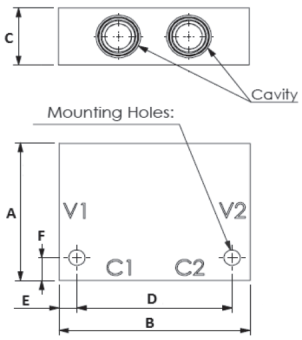

SINGLE BODIES											
MODEL CODE	CAVITY	PORTS 1 & 2	PORT 3	DIMENSIONS							WEIGHT (LBS)
				A	B	C	D	E	F	HOLES (2)	
ML-11A3-S06-A01	T-11A	SAE-06	SAE-06	3.00	2.52	1.26	2.12	0.38	0.44	0.34	0.8
ML-11A3-S08-A01		SAE-08	SAE-06								
ML-2A3-S12A-A01	T-2A	SAE-12	SAE-06	3.25	3.00	1.50	2.25	0.50	0.50	0.42	1.2
ML-17A3-S16-A01	T-17A	SAE-16	SAE-06	4.25	4.00	2.36	2.75	0.75	0.75		3.3
ML-19A3-S16G-A03	T-19A	SAE-16	SAE-06	5.00	5.00	3.00	4.00	0.50	0.50		5.8

DOUBLE BODIES											
MODEL CODE	CAVITY	PORT SIZE	DIMENSIONS							WEIGHT (LBS)
			A	B	C	D	E	F	HOLES (2)	
ML-60-CDW-11A3-11A3-S06-A01	T-11A	SAE-06	3.00	4.00	1.25	3.25	0.37	0.50	0.34	1.5
ML-60-CDW-11A3-11A3-S08-A01		SAE-08								
ML-120-CDW-2A3-2A3-S12-A01	T-2A	SAE-12	3.25	4.50	1.50	3.50	0.50	0.50	0.42	1.6
ML-240-CDW-17A3-17A3-S16-A01	T-17A	SAE-16	4.00	6.50	2.36	5.00	0.75	0.75		4.9

DIRECT ACTING - HYDRO-CUSTOM

• MATERIAL: ZINC PLATED STEEL BODY

BAILEY PART NO	MODEL CODE	PORT SIZE	MAX PSI	MAX GPM	PSI RANGE	WEIGHT (LBS)
280424	RV10-08S-30	SAE-08	5000	10.5	295 - 3000	2.0
280425	RV10-10S-30	SAE-10		13		1.9
280430	RV20-10S-14	SAE-10		21	145 - 1450	2.0
280426	RV20-10S-36	SAE-10		21	290 - 3600	2.0
280427	RV20-12S-36	SAE-12		21		2.3
280431	RV42-16S-50	SAE-16	5000	42	725 - 5000	6.3

RV10 DIMENSIONS

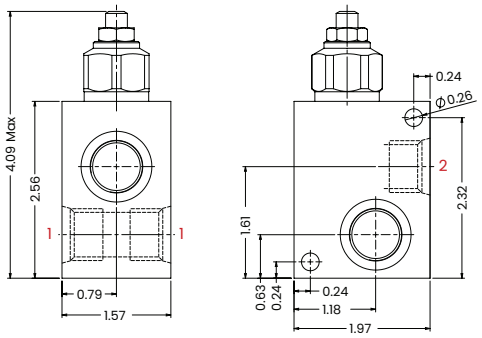

RV42 DIMENSIONS

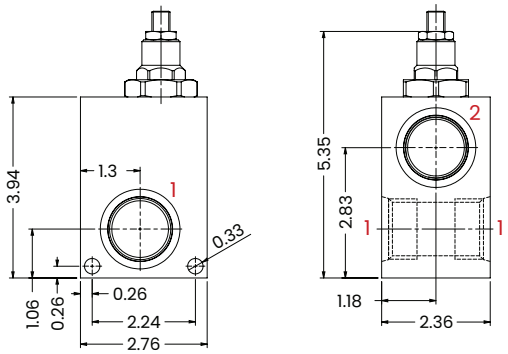

RV20 DIMENSIONS

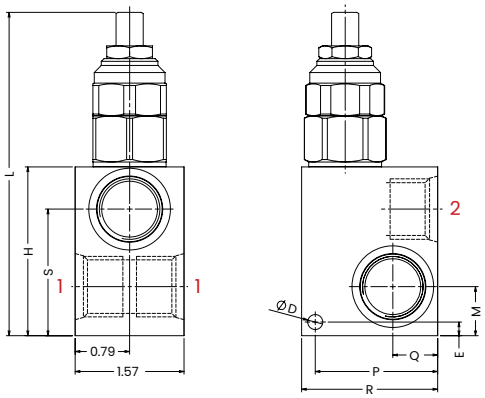

MODELS	DIMENSIONS (IN)								
	L	H	S	M	P	R	D	S	Q
RV20-10S	4.68	2.75	1.87	0.70	1.77	1.96	0.21	0.19	0.72
RV20-12S	5.00	2.44	1.98	0.76	1.88	2.16	0.25	0.27	0.64

DIRECT ACTING - PRINCE

BAILEY PART NO	MODEL CODE	PORT SIZE	MAX PSI	MAX GPM	PSI RANGE	WEIGHT (LBS)
222852	RD-1850-S	1/2 NPT	2500	16	1000 - 2500	2.0
222850	RD-1850-H					
222876	RD-1875-S	3/4 NPT		20		
222875	RD-1875-H					

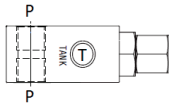

PILOT OPERATED - PRINCE

BAILEY PART NO	MODEL CODE	PORT SIZE	MAX PSI	MAX GPM	PSI RANGE	WEIGHT (LBS)
222790	RV-4L	1/2 NPT	3000	30	500 - 1500	3.0
222787	RV-4H				1500 - 3000	
222785	RV-2L	3/4 NPT			500 - 1500	
222786	RV-2H				1500 - 3000	
	RV-1L	SAE-12			500 - 1500	
222784	RV-1H				1500 - 3000	

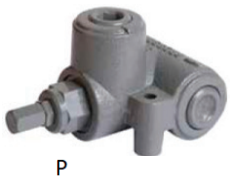

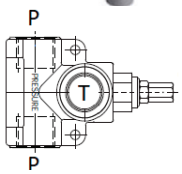

DIRECT ACTING - HYDRO-CUSTOM

• MATERIAL: ZINC PLATED STEEL BODY

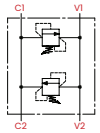

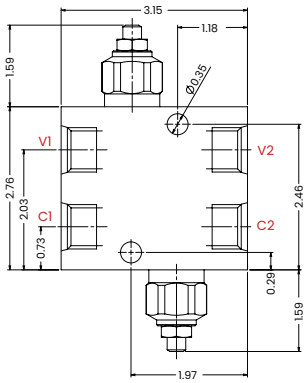

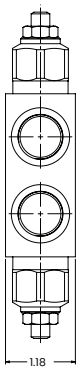

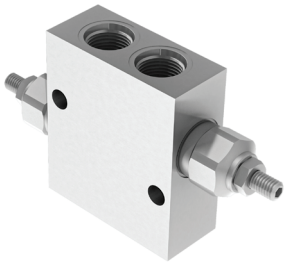

BAILEY PART NO	MODEL CODE	PORT SIZE	MAX PSI	MAX GPM	PSI RANGE	WEIGHT (LBS)
280433	DRV08-06S-50	SAE-06	5075	8.0	1750 - 5075	2.2
280429	DRV10-08S-30	SAE-08		10.5	290 - 3045	2.7

DIRECT ACTING - DELTA-POWER

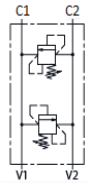

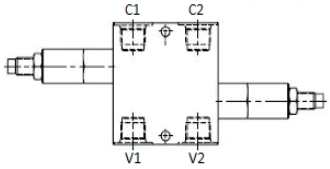

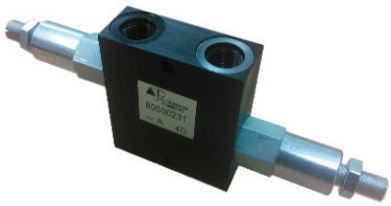

MODEL CODE	PORT SIZE	MAX PSI	MAX GPM	PSI RANGE	WEIGHT (LBS)
SA-00-15-15	SAE-08	3000	10.0	150 - 1500	1.3
SA-00-30-30				1500 - 3000	
SA-00-40-40				2500 - 4000	

PILOT OPERATED - PRINCE

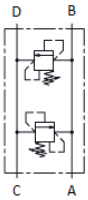

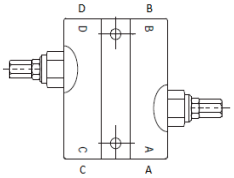

BAILEY PART NO	MODEL CODE	PORT SIZE	MAX GPM	MAX PSI	PSI RANGE	WEIGHT (LBS)
222802	DRV-4LL	1/2 NPT	30	3000	500 - 1500	5.5
222804	DRV-4HH				1500 - 3000	
222803	DRV-2HH	3/4 NPT			1500 - 3000	
222807	DRV-5HH	SAE-08	30	3000	1500 - 3000	
222806	DRV-1HH	SAE-12			1500 - 3000	

6 PORTS - HYDRO-CUSTOM

MODEL CODE	PORT SIZE	MAX GPM	MAX PSI	PSI RANGE	WEIGHT (LBS)
HIC-053	SAE-08	9	5000	1450 - 5000	2.7

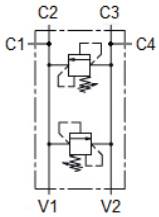

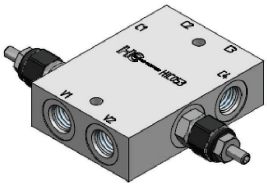

DIRECT ACTING

- LIMIT PRESSURE IN THE SYSTEM
- FAST ACTING
- MANY OTHER MODELS AVAILABLE

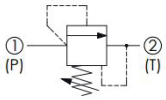

PILOT OPERATED

- LIMIT PRESSURE IN THE SYSTEM
- SMOOTH AND STABLE
- MANY OTHER MODELS AVAILABLE

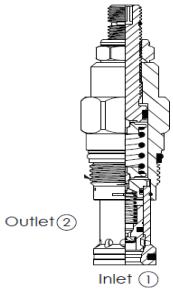

MODEL CODE	MAX GPM	MAX PSI	PSI RANGE	CAVITY
DE-RVA-00-1500	8	4000	200 - 1500	C10-2
DE-RVA-00-3000			1500 - 3000	
DE-RWA-00-3000			100 - 3000	
DE-RCA-00-3500	12	3500	250 - 3500	
RD10A-25-B-L	25	5000	300 - 1500	T-10A
RD10A-25-A-L			500 - 3000	
RD10A-25-C-L			1000 - 6000	
RD3A-25-B-L	50	5000	300 - 1500	T-3A
RD3A-25-A-L			500 - 3000	
RD3A-25-C-L			1000 - 6000	
RD16A-25-B-L	100	5000	250 - 3500	T-16A
RD16A-25-A-L			500 - 3000	
RD16A-25-C-L			1000 - 6000	

MODEL CODE	MAX GPM	MAX PSI	PSI RANGE	CAVITY
DE-RVP-00-4000	20	4000	1000 - 4000	C10-2
RP10W-25-B-L	25	5000	50 - 1500	
RP10W-25-A-L			100 - 3000	
RP10W-25-C-L			150 - 6000	
RP10A-20-B-L	50	5000	50 - 1500	T-10A
RP10A-20-A-L			100 - 3000	
RP10A-20-C-L			150 - 6000	
RP3A-20-B-L	50	5000	50 - 1500	T-3A
RP3A-20-A-L			100 - 3000	
RP3A-20-C-L			150 - 6000	
RP16A-20-B-L	100	5000	50 - 1500	T-16A
RP16A-20-A-L			100 - 3000	
RP16A-20-C-L			150 - 6000	

LINE MOUNT BODIES

- MATERIAL: ANODIZED ALUMINUM
- 3000 PSI MAXIMUM PRESSURE
- MANY OTHER MODELS AVAILABLE

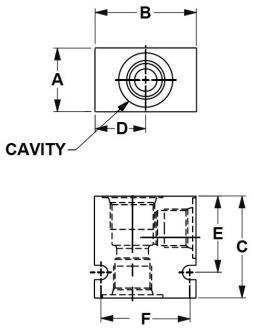

C10-2 CAVITY

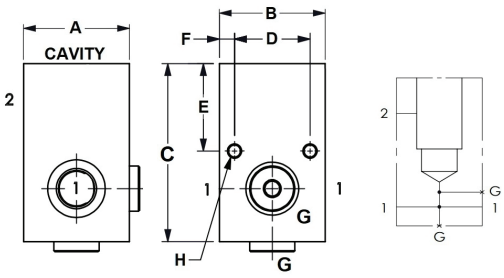

T-* CAVITIES

MODEL CODE	CAVITY	PORT SIZE	DIMENSIONS (IN)							
			A	B	C	D	E	F	G	H (2)
30102364	C10-2	SAE-06	2.12	2.0	1.50	1.75	0.50	-	-	0.28
30102359		SAE-08								
ML-10A2-S08G-A02	T-10A	SAE-08	1.75	1.75	2.94	1.25	2.06	0.25	1/4 NPT	1/4-20 UNC 1/2" DEEP
ML-10A2-S10G-A02		SAE-10								
ML-3A2-S10G-A02	T-3A	SAE-10	2.0	2.0	3.25	1.25	1.37	0.25		
ML-3A2-S12G-A02		SAE-12								
ML-16A2-S12G-A02	T-16A	SAE-12	3.0	3.0	4.5	2.25	2.11	0.37		3/8-16 UNC 5/8" DEEP

PRESSURE CONTROLS

FUNCTION	MODEL CODE	MAX GPM	MAX PSI	PSI RANGE	CAVITY	SCHEMATIC
VENTED RELIEF	RV11A-30-A-L	15	5000	100 - 3000	T11-A	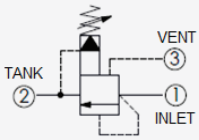
	RV2A-30-A-L	30			T2-A	
	RV17A-30-A-L	60			T-17A	
	RV19A-30-A-L	120			T-19A	
PRESSURE REDUCING	PB11A-30-A-L	10	5000	100 - 3000	T11-A	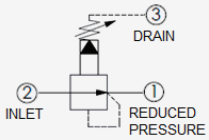
	PB2A-30-A-L	20			T2-A	
	PB17A-30-A-L	40			T-17A	
	PB19A-30-A-L	80			T-19A	
PRESSURE REDUCING/ RELIEVING	DF-PRP-00-3000	10	3000	100 - 3000	C10-3	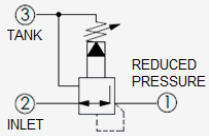
	SK-PRP-00-3000	20		500 - 3000	C16-3	
	PP11A-30-A-L	10	5000	100 - 3000	T11-A	
	PP2A-30-A-L	20			T2-A	
	PP17A-30-A-L	40			T-17A	
	PP19A-30-A-L	80			T-19A	
SEQUENCE	SP11A-30-A-L	15	5000	100 - 3000	T11-A	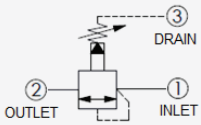
	SP2A-30-A-L	30			T2-A	
	SP17A-30-A-L	60			T-17A	
	SP19A-30-A-L	120			T-19A	
UNLOADING	DF-PWE-00-0425	10	3000	50-425	C10-3	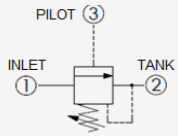
	DF-PWE-00-1500			425-1500		

LINE MOUNT BODIES

- MATERIAL: ANODIZED ALUMINUM
- 3000 PSI MAXIMUM PRESSURE
- MANY OTHER MODELS AVAILABLE

C**-3 BODIES

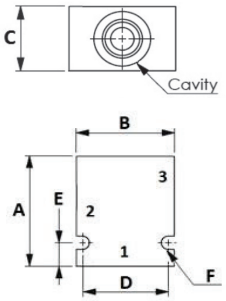

T**A BODIES

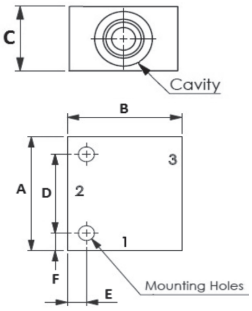

MODEL CODE	CAVITY	PORTS 1 & 2	PORT 3	DIMENSIONS (IN)						
				A	B	C	D	E	F	HOLES (2)
30102354	C10-3	SAE-08	SAE-08	2.50	2.50	1.50	2.25	0.38	0.28	-
30102576	C16-3	SAE-12	SAE-12	4.00	4.00	2.00	3.38	0.88	-	0.38
ML-11A3-S08-A01	T-11A	SAE-08	SAE-06	3.00	2.75	1.26	2.09	0.38	0.44	0.34
ML-2A3-S12A-A01	T-2A	SAE-12	SAE-06	3.25	3.00	1.50	2.25	0.50	0.50	0.42
ML-17A3-S16-A01	T-17A	SAE-16	SAE-06	4.25	4.00	2.36	2.75	0.75	0.75	
ML-19A3-S20G-A03	T-19A	SAE-20	SAE-06	5.00	5.00	3.00	4.00	0.50	0.50	
ML-19A3-S16-A01	T-19A	SAE-16	SAE-16							

FLOW CONTROLS

• MATERIAL: ZINC PLATED STEEL BODY

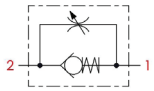

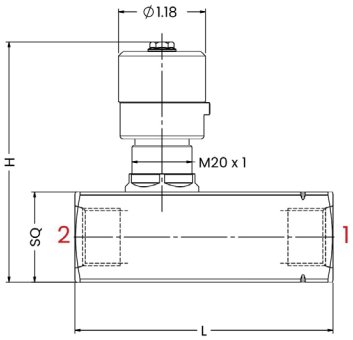

BAILEY PART NO	MODEL CODE	PORT SIZE	MAX PSI	MAX GPM	DIMENSIONS (IN)			WEIGHT (LBS)
					L	H	SQ	
450700	FC-04N	1/4 NPT	5800	6.6	2.63	2.99	0.98	0.88
450702	FC-06N	3/8 NPT	5800	9.3	3.03	2.99	0.98	0.88
450704	FC-08N	1/2 NPT	5800	13.2	3.38	3.19	1.18	1.32
450701	FC-06S	SAE-06	5800	6.6	2.77	2.99	0.98	0.88
450703	FC-08S	SAE-08	5800	9.3	3.38	3.19	1.18	0.88

PRESSURE COMPENSATED FLOW CONTROLS

• MATERIAL: ZINC PLATED STEEL BODY

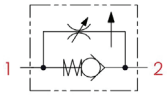

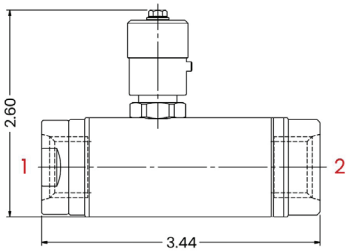

BAILEY PART NO	MODEL CODE	PORT SIZE	MAX PSI	MAX GPM	DIMENSIONS (IN)		WEIGHT (LBS)
					L	H	
450707	FCC-06S	SAE-06	3625	6.6	3.44	2.60	1.10
450708	FCC-08S	SAE-08	3625	7.9	3.44	2.60	1.10

NEEDLE VALVES

• MATERIAL: ZINC PLATED STEEL BODY

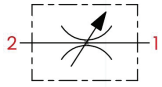

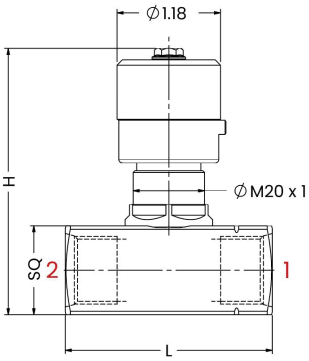

BAILEY PART NO	MODEL CODE	PORT SIZE	MAX PSI	MAX GPM	DIMENSIONS (IN)			WEIGHT (LBS)
					L	H	SQ	
450709	NV-04N	1/4 NPT	5800	6.6	2.13	2.99	0.98	0.66
450711	NV-06N	3/8 NPT	5800	9.3	2.13	2.99	0.98	0.66
450712	NV-08N	1/2 NPT	5800	13.2	2.28	3.19	1.18	0.98
450710	NV-06S	SAE-06	5800	6.6	2.13	2.99	0.98	0.66

3 WAY PRIORITY VALVE - LEVER TYPE

- PRESSURE COMPENSATED
- SEND EXCESS FLOW TO TANK

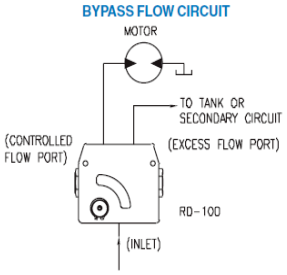

BAILEY PART NO	MODEL CODE	PORT SIZE	MAX PSI	MAX GPM	CONTROL FLOW (GPM)
252452	W-1950-16	1/2 NPT	3000	30	0 - 16
252455	WR-1950-16 *				
252454	W-1975-30	3/4 NPT			0 - 30
252456	WR-1975-30 *				
252453	W-1912-30	SAE-12			0 - 30
252457	WR-1912-30 *				

* MODEL WITH RELIEF

SIDE PORTED

BAILEY PART NO	MODEL CODE	PORT SIZE	MAX PSI	MAX GPM	CONTROL FLOW (GPM)
222199	RD-1950-8	1/2 NPT	3000	30	0 - 8
222455	RDRS-1950-8*				
	RDRS-1908-8	SAE-08			
222198	RD-1950-16	1/2 NPT			0 - 16
	RDRS-1950-16 *				
222204	RD-1975-30	3/4 NPT			0 - 30
222460	RDRS-1975-30 *				
222210	RD-1912-30	SAE-12			

* MODEL WITH RELIEF

TOP PORTED

BAILEY PART NO	MODEL CODE	PORT SIZE	MAX PSI	MAX GPM	CONTROL FLOW (GPM)
222200	RD-150-8	1/2 NPT	3000	30	0 - 8
222175	RD-175-30	3/4 NPT			0 - 30

3 WAY PRIORITY VALVE - KNOB TYPE

- 3000 PSI MAXIMUM PRESSURE
- PRESSURE COMPENSATE
- SEND EXCESS FLOW TO TANK

MODEL CODE	PORT SIZE	MAX GPM	
		INLET	CONTROL FLOW
PVET-02	SAE-08	10.5	0- 6 .5
PVET-04	SAE-12	39	0 - 23.5

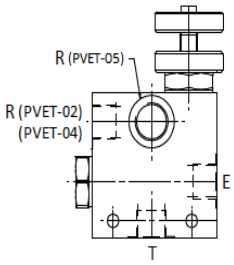

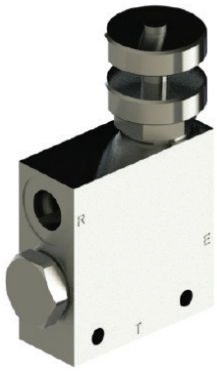

FLOW CONTROLS CARTRIDGE TYPE

MODEL CODE	MAX GPM	MAX PSI	CAVITY
NC13A-21BCL	6	5000	T-13A
DE-FCH-00	12	3500	C10-2
NC5A-21BCL	12	5000	T-5A
NC16A-21BCL	31		T-16A
NC18A-21BCL	50		T-18A

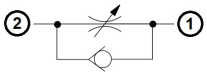

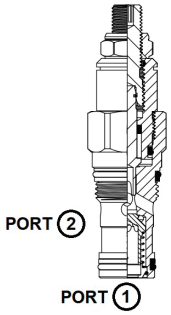

NEEDLE VALVE - CARTRIDGE TYPE

MODEL CODE	MAX GPM	MAX PSI	CAVITY
NV162A-2S40L	4	5000	T-162A
NV13A-2048L	6		T-13A
NV08W-20NL	10		C8-2
DE-NVA-00	10	3500	C10-2
DE-NVB-00	15		
NV5A-2063L	12.5	5000	T-5A
NV16A-2097L	25		T-16A
HT-NVA-00	36		C12-2
NV16A-28175L	90		T-16A

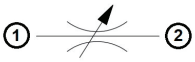

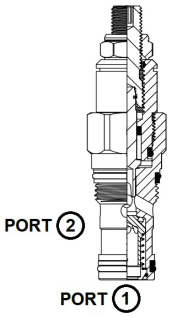

FLOW CONTROLS - PRESSURE COMPENSATED

MODEL CODE	MAX GPM	MAX PSI	FLOW RANGE (GPM)	CAVITY
FR13A-20AL	6	5000	0.1-5.5	T-13A
FR5A-20AL	25		0.1-11	T-5A
FR16A-20AL	39		0.2-24	T-16A
FR18A-20AL	79		0.2-50	T-18A

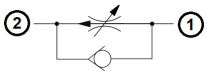

GO TO PAGE 126 FOR BODIES

3 WAY PRIORITY VALVE - CARTRIDGE TYPE

- PRESSURE COMPENSATED
- SEND EXCESS FLOW TO TANK
- KNOB AVAILABLE
- OTHER MODELS AVAILABLE

MODEL CODE	MAX GPM	MAX PSI	CONTROL FLOW (GPM)	CAVITY
FR10W-33NB	15	3500	0-10	C10-3
SK-FCQ-00-0025	25	3000	1-25	C16-3
FR17A-3A1000L	39	5000	0-26	T-17A
FR19A-3A2000L	79		0.2-53	T-19A

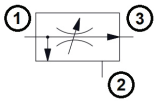

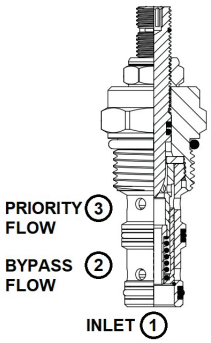

GO TO PAGE 121 FOR BODIES

CARTRIDGES SUN VS WINNER INTERCHANGE TOOL

- SUPERIOR QUALITY
- ISO & SUN CAVITIES
- 100% TESTED
- HEAT TREATMENT AND PLATING IN HOUSE
- ALL VALVES ARE ZINC-NICKEL PLATED. PROVIDES PROTECTION OF OVER 1000 HOURS BASED ON ASTM B117 SALT SPRAY TEST COMPARE TO 24 HOURS COMMON ZINC PLATING

SUN	WINNER
CBCA-LHN	CB11A33HL
CBCA-LIN	CB11A33IL
CBCG-LJN	CB11A34JL
CBCG-LKN	CB11A34KL
CBCH-LJN	CB11A30JL
CBCH-LKN	CB11A30KL
CBEA-LHN	CB2A33HL
CBEA-LIN	CB2A33IL
CBEG-LJN	CB2A34JL
CBEG-LKN	CB2A34KL
CBEH-LJN	CB2A30JL
CBEH-LKN	CB2A30KL
CBGA-LHN	CB17A33HL
CBGA-LIN	CB17A33IL
CBGG-LJN	CB17A34JL
CBGG-LKN	CB17A34KL
CBGH-LJN	CB17A30JL
CBGH-LKN	CB17A30KL
CBIA-LHN	CB19A33HL
CBIA-LIN	CB19A33IL
CBIG-LJN	CB19A34KL
CBIG-LKN	CB19A34JL
CBIH-LJN	CB19A30KL
CBIH-LKN	CB19A30JL
CKBB-XCN	CO163A3020N
CKBD-XCN	CO163A3C20N
CKCB-XAN	CO11A3003N
CKCB-XCN	CO11A3020N
CKCD-XAN	CO11A3C03N
CKCD-XCN	CO11A3C20N
CKEB-XAN	CO2A3003N
CKEB-XCN	CO2A3020N
CKED-XAN	CO2A3C03N
CKED-XCN	CO2A3C20N
CKGB-XAN	CO17A3003N
CKGB-XCN	CO17A3020N
CKGD-XAN	CO17A3C03N
CKGD-XCN	CO17A3C20N
CKIB-XAN	CO19A3003N
CKIB-XCN	CO19A3020N
CKID-XAN	CO19A3C03N
CKID-XCN	CO19A3C20N
COBA-XCN	CC163A3020N
CODA-XCN	CC11A3020N
COFA-XCN	CO2A3020N
COHA-XCN	CO17A3003N

SUN	WINNER
COJA-XCN	CO19A3020N
CSAA-EXN	LS13A20NS04
CSAB-XXN	LS11A33NN
CSAC-EXN	LS13A22NS04
CSAD-XXN	LS11A30NN
CSAW-EXN	LS162A20NS04
CSAX-XXN	LS163A33NN
CSAY-EXN	LS162A22NS04
CSAZ-XXN	LS163A30NN
CXAD-XCN	CV162A2120
CXBA-XAN	CV162A2003
CXBA-XCN	CV162A2020
CXCD-XCN	CV13A2120
CXDA-XAN	CV13A2003
CXDA-XCN	CV13A2020
CXED-XCN	CV5A2120
CXFA-XAN	CV5A2003
CXFA-XCN	CV5A2020
CXGD-XCN	CV16A2120
CXHA-XAN	CV16A2003
CXHA-XCN	CV16A2020
CXID-XCN	CV18A2120
CXJA-XAN	CV18A2003
CXJA-XCN	CV18A2020
FDBA-KAN	FR13A20AK
FDBA-LAN	FR13A20AL
FDCB-KAN	FR5A20AK
FDCB-LAN	FR5A20AL
FDEA-KAN	FR16A20AK
FDEA-LAN	FR16A20AL
FDFA-KAN	FR18A20AK
FDFA-LAN	FR18A20AL
FXCA-XAN*	FR13A2F****N
FXDA-XAN*	FR5A2F****N
NCBB-LCN	NC162A21BCL
NCCB-KCN	NC13A21BCK
NCCB-LCN	NC13A21BCL
NCEB-KCN	NC5A21BCK
NCEB-LCN	NC5A21BCL
NCFB-KCN	NC16A21BCK
NCFB-LCN	NC16A21BCL
NCGB-KCN	NC18A21BCK
NCGB-LCN	NC18A21BCL
NFBC-KCN	NV162A2S40K
NFBC-LCN	NV162A2S40L
NFCC-KCN	NV13A2S48K

SUN	WINNER
NFCC-LCN	NV13A2S48L
NFCD-KFN	NV13A2884K
NFCD-LFN	NV13A2884L
NFDC-KAN	NV5A2S63K
NFDC-LAN	NV5A2S63L
NFDD-KGN	NV5A28127K
NFDD-LGN	NV5A28127L
NFEC-KEN	NV16A2S97K
NFEC-LEN	NV16A2S97L
NFED-KHN	NV16A28175K
NFED-LHN	NV16A28175L
NFFD-KIN	NV16A29216K
NFFD-LIN	NV16A29216L
PBDB-8DN	PP11A30D8
PBDB-8WN	PP11A30W8
PBDB-LAN	PB11A30AL
PBDB-LWN	PB11A30WL
PBFB-8DN	PP2A30D8
PBFB-8WN	PP2A30W8
PBFB-LAN	PB2A30AL
PBFB-LWN	PB2A30WL
PBHB-8DN	PP17A30D8
PBHB-8WN	PP17A30W8
PBHB-LAN	PB17A30AL
PBHB-LWN	PB17A30WL
PBJB-8DN	PP19A30D8
PBJB-8WN	PP19A30W8
PBJB-LAN	PB19A30AL
PBJB-LWN	PB19A30WL
PPDB-LAN	PP11A30AL
PPDB-LWN	PP11A30WL
PPFB-LAN	PP2A30AL
PPFB-LWN	PP2A30WL
PPHB-LAN	PP17A30AL
PPHB-LWN	PP17A30WL
PPJB-LAN	PP19A30AL
PPJB-LWN	PP19A30WL
RDBA-LAN	RD162A20AL
RDBA-LWN	RD162A20AW
RDDA-LAN	RD10A20AL
RDDA-LWN	RD10A20AW
RDFA-LAN	RD3A20AL
RDFA-LWN	RD3A20AW
RDHA-LAN	RD16A20AL
RDHA-LWN	RD16A20AW
RDJA-LAN	RD18A20AL

SUN	WINNER
RDJA-LWN	RD18A20AW
RPCC-LAN	RP162A20AL
RPCC-LWN	RP162A20AW
RPEC-8DN	RP10A20D8
RPEC-8WN	RP10A20W8
RPEC-LAN	RP10A20AL
RPEC-LWN	RP10A20AW
RPGC-8DN	RP3A20D8
RPGC-8WN	RP3A20W8
RPGC-LAN	RP3A20AL
RPGC-LWN	RP3A20AW
RPIC-8DN	RP16A20D8
RPIC-8WN	RP16A20W8
RPIC-LAN	RP16A20AL
RPIC-LWN	RP16A20AW
RPKC-8DN	RP18A20D8
RPKC-8WN	RP18A20W8
RPKC-LAN	RP18A20AL
RPKC-LWN	RP18A20AW
RSDC-8DN	RV11A30D8
RSDC-8WN	RV11A30W8
RSDC-LAN	SP11A30AL
RSDC-LWN	SP11A30WL
RSFC-8DN	RV2A30D8
RSFC-8WN	RV2A30W8
RSFC-LAN	SP2A30AL
RSFC-LWN	SP2A30WL
RSHC-8DN	RV17A30D8
RSHC-8WN	RV17A30W8
RSHC-LAN	SP17A30AL
RSHC-LWN	SP17A30WL
RSJC-8DN	RV19A30D8
RSJC-8WN	RV19A30W8
RSJC-LAN	SP19A30AL
RSJC-LWN	SP19A30WL
SCCA-LAN	SC11A30AL
SCCA-LWN	SC11A30WL
SCEA-LAN	SC2A30AL
SCEA-LWN	SC2A30WL
SCGA-LAN	SC17A30AL
SCGA-LWN	SC17A30WL
SCIA-LAN	SC19A30AL
SCIA-LWN	SC19A30WL

LINE MOUNT BODIES

- MATERIAL: ANODIZED ALUMINUM
- 3000 PSI MAXIMUM PRESSURE
- MANY OTHER MODELS AVAILABLE

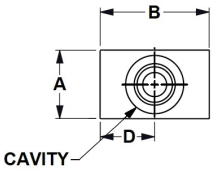

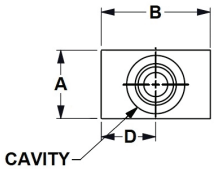

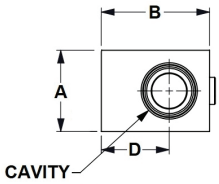

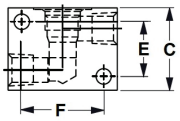

C8-2 CAVITY

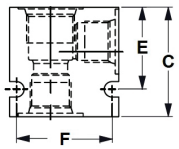

C10-2 CAVITY

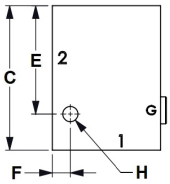

T-* CAVITIES

MODEL CODE	CAVITY	PORT SIZE	DIMENSIONS (IN)							
			A	B	C	D	E	F	G	H
30102466	C8-2	SAE-06	1.25	2.00	2.00	1.13	1.50	1.50	-	0.28
30102364	C10-2	SAE-06	1.50	2.00	2.00	1.25	1.50	1.75	-	0.28
30102359		SAE-08							-	
ML-162A2-S06-A01	T-162A	SAE-06	1.00	1.50	2.00	1.00	1.72	0.28	-	0.28
ML-13A2-S06-A01	T-13A	SAE-06	1.25	1.63	2.19	1.00	1.91	0.28	-	0.34
ML-5A2-S08-A01	T-5A	SAE 08	1.50	2.0	2.63	1.50	2.25	0.38		0.42
ML-5A2-S10-A01		SAE-10								
ML-16A2-S12G-A01	T-16A	SAE-12	2.25	3.0	4.00	1.88	3.00	0.50	1/4 NPT	0.42
ML-16A2-S16G-A01		SAE 16								

PRESSURE COMPENSATED FLOW DIVIDERS

- DIVIDER / COMBINER
- 3000 PSI MAXIMUM PRESSURE
- PRECISE AT +/- 10% ACCURACY
- COMMON CAVITIES

MODEL CODE	INLET FLOW (GPM)	PORT SIZE
DG-FDA-00-50-03	2-3	SAE-08 (USE BODY 30102362)
DG-FDA-00-50-06	3-6	
DG-FDA-00-50-09	6-9	
DG-FDA-00-50-12	9-12	
SN-FDA-00-50-15	8-15	SAE-12 (USE BODY 30102577)
SN-FDA-00-50-25	15-25	
SN-FDA-00-50-40	20-40	

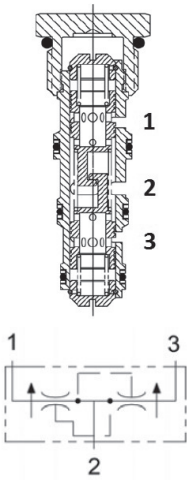

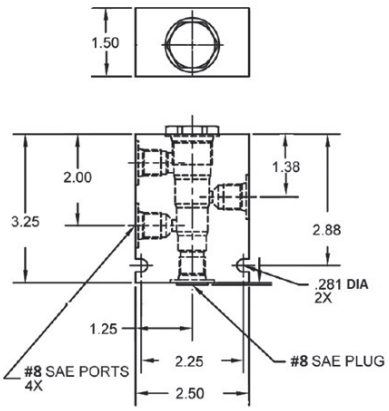

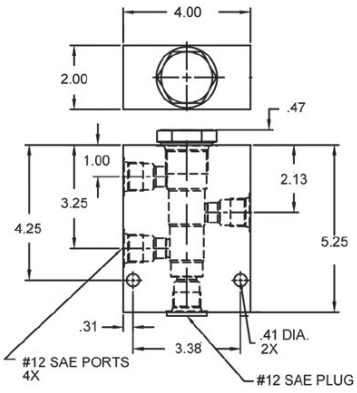

VIVOIL DIVIDERS

- SPLIT FLOW EQUALLY WITH +/- 1,5% ACCURACY
- INTEGRATED RELIEFS TO REALIGN CYLINDERS WHEN THEY REACH END OF CYCLE
- FOR A QUIET OPERATION, SELECT SPEED AT REC FLOW

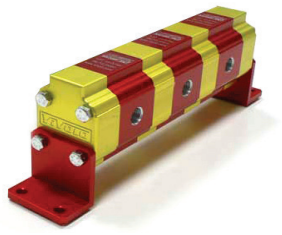

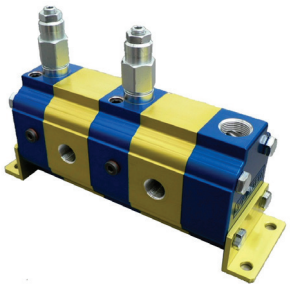

MODEL CODE	NUMBER OF SECTIONS	DISPLACEMENT IN³ / REV.	RPM		GPM		MAX PSI	PORT SIZE	
			MIN	MAX	MIN	MAX		IN	OUT
ARV02B01	2	0.01	1155	7392	0.10	0.64	3045	SAE-4	SAE-4
ARV02B06	2	0.05	1200	5867	0.53	1.27	3045		
ARV02B20	2	0.13	1175	6095	1.3	6.9	3190	SAE-8	SAE-6
ARV02B27	2	0.26	1060	5400	2.4	12.2	3190		
ARV02B34	2	0.48	1082	4520	4.5	18.0	3045		
ARV02B43	2	0.37	1200	2500	3.8	7.9	3000	SAE-12	SAE-10
ARV02B49	2	0.85	1200	2500	8.9	18.5	2600		
ARV02B55	2	1.34	1200	2500	13.9	29.0	2600		
ARV04B20	4	0.13	1175	6095	2.6	13.7	3190	SAE-8	SAE-6
ARV04B27	4	0.26	1060	5400	4.7	24.3	3190		

DELTA POWER DIVIDERS

- SPLIT FLOW EQUALLY WITH +/- 2% ACCURACY
- INTEGRATED RELIEFS TO REALIGN CYLINDERS WHEN THEY REACH END OF CYCLE
- FOR A QUIET OPERATION, SELECT SPEED AT RECOMMANDED FLOW
- CAN BE USE INTERNAL OR EXTERNAL DRAIN
- AVAILABLE FROM 2 TO 16 SECTIONS

MODEL CODE	NUMBER OF SECTIONS	DISPLACEMENT IN³ / REV.	RPM		GPM		MAX PSI	PORT SIZE	
			MIN	MAX	MIN	MAX		IN	OUT
PM2-RV **	2	0.11	500	3500	0.5	3.5	2000	1/2 NPT	3/8 NPT
PM6-RV **	2	0.32			1.35	9.5	1500		
HPR23	2	0.70			3.0	21	3000	SAE-16	SAE-12
HPR27	2	1.46			6.3	44	3000		
PPM2-RV **	4	0.11			1.0	7.0	1500	1/2 NPT	3/8 NPT
HPR21-59	4	0.41			3.57	25	3000	SAE-16	SAE-12
HPR23-59	4	0.70			6	42	3000		

** MODELS AVAILABLE WITHOUT RELIEF

ASA MODELS

- DIAPHRAGM TYPE
- REPAIRABLE
- P1620 VALVE ON TOP

MODEL CODE	VOLUME (LITERS)	MAX PSI	PORT SIZE	DIMENSIONS (IN)	
				A	C
AS0.2 NE1W	0.2	5880	1/4 BSPP	5.9	3.3
AS0.5 NE1W	0.5		3/8 BSPP	7.2	4.5
AS0.7 NE1W	0.7	3675		7.8	4.7
AS1 NE1W	1.0	5880	M18X1.5		6.4

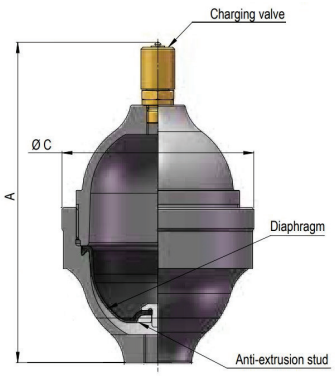

ACSA & ACSL MODELS

- ECONOMICAL
- NON-REPAIRABLE
- BLADDER TYPE

MODEL CODE	VOLUME (LITER)	MAX PSI	PORT SIZE	VALVE	DIM "A' (IN)
ACSL0.7 S15VN	0.7	3000	SAE-08	SCREW	6.9
ACS0.7 S15YP		4800		SCHRADER	
ACSL1 S15VN	1.0	3000	SAE-08	SCREW	9.7
ACS1 S15YP		4800		SCHRADER	
ACS1.5 S15VN	1.5	4800	SAE-08	SCREW	12.4
ACS1.5 S15YP				SCHRADER	
ACS2.5 S15VN	2.5	4800	SAE-08	SCREW	18.3
ACS2.5 S16YP			SAE-12	SCHRADER	
ACS4 S16VN	4.0	4800	SAE-12	SCREW	27.4
ACS4 S16YP				SCHRADER	

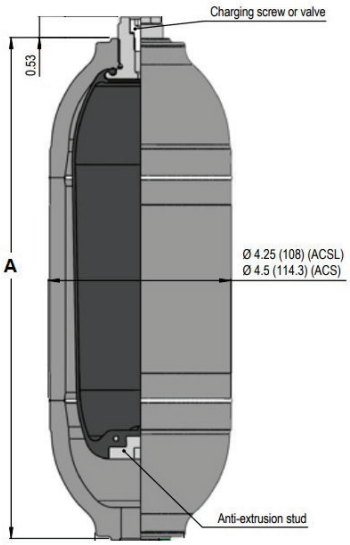

ABVE MODELS

- BLADDER TYPE
- REPAIRABLE

MODEL CODE	VOLUME (LITER)	MAX PSI	PORT SIZE	VALVE	DIMENSIONS (IN)	
					A	C
ABVE4 S2G4WN	4	5145	1 1/4" BSPP	P1620	17.2	6.7
ABVE10 S2G5WN	10	4800	2" BSPP		22.8	9.0
ABVE20 S2G5WN	20	4800			34.6	
ABVE32 S2G5WN	32				55.1	
ABVE50 S0G5WN	50				75.4	

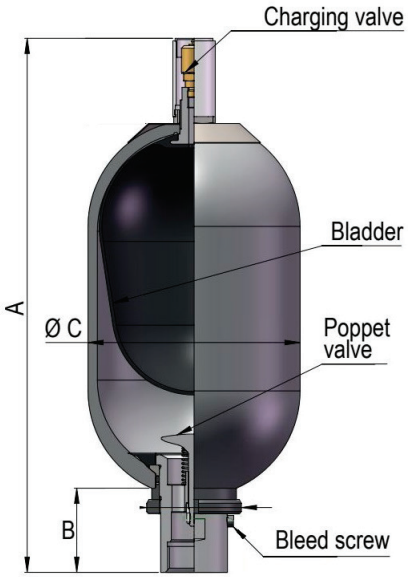

FIXATION CLAMPS

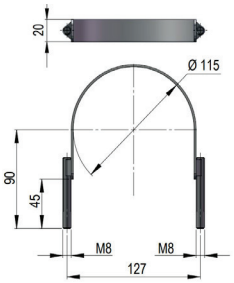

C001028
FITS ON ACS MODELS

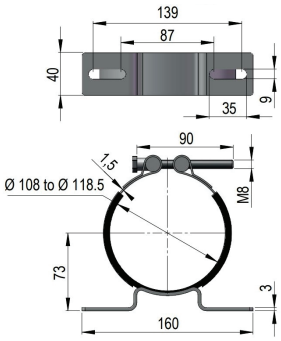

254021
FITS ON ACS, ASA0.5 TO 0.7 MODELS

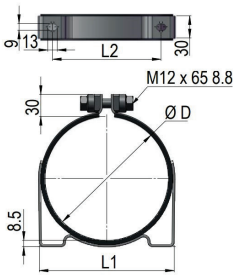

254022
FITS ON ASA1, ABVE4 MODELS

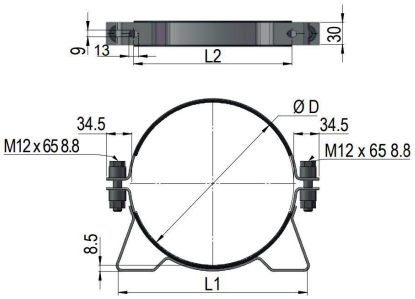

254007
FITS ON ABVE10 TO ABVE50 MODELS

FIXATION SEATS

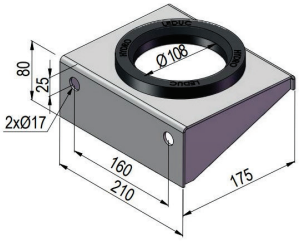

254012
FITS ON ABVE4 MODELS

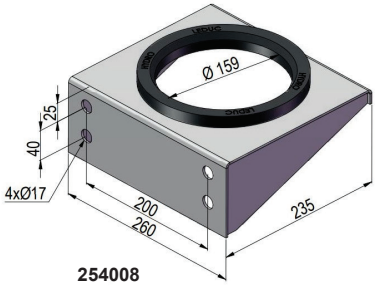

254008
FITS ON ABVE10 TO ABVE 50 MODELS

PISTON ACCUMULATORS

- 3000 PSI MAXIMUM WORKING PRESSURE
- DESIGNED FOR MOBILE APPLICATION
- REACT FAST
- LONG SERVICE LIFE
- REPAIRABLE
- COMPACT DESIGN
- COMMON SHRADER VALVE

MODEL CODE	VOLUME (IN^3)	DIM "A"
AC-0006-3	6	6.50
AC-0024-3	24	12.25
AC-0052-3	52	21.25

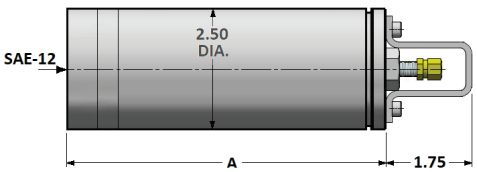

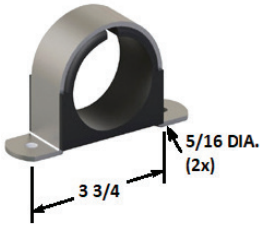

AC BRACKET
FITS ON AC MODELS

CHARGING KITS

066650 COMPLETE KIT
- ADAPTS TO MOST OF VALVE
- INCLUDES HOSE

066660 CHARGING KIT
ADAPTS TO MOST OF VALVES

701630 (NO GAUGE)
FITS ON SCHRADER VALVES ONLY

704230
HOSE KIT FOR 701630

PRESSURE SWITCHES

- 9000 PSI MAXIMUM PRESSURE
- FIELD ADJUSTABLE
- +/- 2% REPEATABILITY
- 1/4 NPT CONNECTION
- UP TO 3A / 125 VAC SUPPLY
- N.O. OR N.C. CIRCUIT
- DIN CONNECTOR TYPE

MODEL CODE	PSI RANGE	PSI DIFFERENTIAL
BPA-1-4M-C-HC	10 - 85	3 - 10
BPA-1A-4M-C-HC	65 - 300	8 - 30
BPA-3-4M-C-HC	300 - 2500	50 - 300
BPA-4-4M-C-HC	1000 - 6000	150 - 600
BPA-5-4M-C-HC	500 - 3500	75 - 300

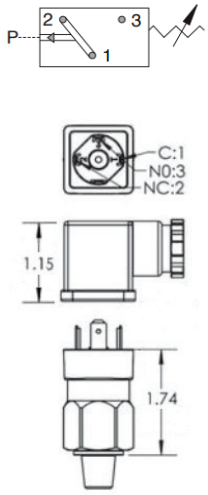

VACUUM SWITCH

- 9000 PSI MAXIMUM PRESSURE
- FIELD ADJUSTABLE
- +/- 2% REPEATABILITY
- 1/4 NPT CONNECTION
- UP TO 3A / 125 VAC SUPPLY
- N.O. OR N.C. CIRCUIT
- DIN CONNECTOR TYPE
- 5-85 IN HG RANGE

MODEL CODE: BPA-1-4M-C-HC

PRESSURE TRANSDUCERS

- 8700 PSI MAXIMUM PRESSURE
- 4 - 20 MA SIGNAL OUTPUT (2 WIRE)
- 1/4 NPT CONNECTION
- +/- 0.5% REPEATABILITY

INFORMATION ABOUT THE TDD MODEL WITH LCD DISPLAY
- DISPLAY IN REALTIME
- CAN BE SET IN DIFFERENT UNITS: KPA, MPA, BAR, PSI
- PROVIDE ADJUSTMENT TO ZERO AND SPAN CALIBRATION

MODEL CODE	PSI RANGE	VOLTAGE SUPPLY	CONNECTOR
XTC-A-0/3000-4M-HCM-81	0 - 3000	12-30 VDC	MINI DIN 43650C
XTC-A-0/6000-4M-HCM-81	0 - 6000		
TDD-A-0/3000-4M-M	0 - 3000	18-30 VDC	M12 - 3 PINS C/W 79” CABLE
TDD-A-0/6000-4M-M	0 - 6000		

TDD MODEL
WITH LCD DISPLAY

ALSO AVAILABLE

- DIFFERENT PORTS AND ADJUSTMENT RANGE
- OTHER OUTPUT SIGNALS & TYPE OF ELECTRICAL CONNECTORS
- FACTORY SET ADJUSTEMENT
- MANY OTHER MODELS FOR SPECIFIC APPLICATIONS
- DIFFERENTIAL PRESSURE SWITCH
- TEMPERATURE SWITCH & TRANSDUCER







PRESSURE GAUGES

- 2 1/2" & 4" ROUND FACE
- GLYCERIN FILLED
- 1/4 NPT CONNECTION ON THE 2 1/2" FACE
- 1/2 NPT CONNECTION ON THE 4" FACE

MODEL CODE

CPG - □P - □□□□ - □ - N

DIAMETER — PSI RANGE — MOUNT TYPE

GAUGE DIAMETER	
INCHES	CODE
2 1/2"	1
4"	2

MOUNT TYPE	
TYPE	CODE
BOTTOM STEM	A
BACK STEM	D

PRESSURE RANGE	
PSI RANGE	CODE
0 - 600	600
0 - 1000	1000
0 - 2000	2000
0 - 3000	3000
0 - 5000	5000
0 - 6000	6000
0 - 10000	10K

STEM MOUNT

CENTER BACKMOUNT

BACKMOUNT FLANGE

MODEL CODE	GAUGE DIAMETER
CPMB - 1 P	2 1/2"
CPMB - 2P	4"

DIGITAL PRESSURE GAUGES

	HYDRO CUSTOM	STAUFF
DISPLAY MEASURED VALUES (MIN & MAX)	√	√
RUBBER PROTECTIVE COVERING		√
UNITS: BAR, PSI, MPA, KPA	√	√
RESET BUTTON	√	√
BACKGROUND LIGHTNING	√	√
ACCURACY OR 0.5% OF FULL SCALE	√	√
SAE 04 CONNECTION		√
NPT 1/4 CONNECTION	√	
WIRELESS AVAILABLE	√	√

CDPG-IP5000A-N
0-5000 PSI

CDPG-IP12KA-N
0-12000 PSI

SPG-DIGI-B0400-U
0-5800 PSI

BAYONET FILLER BREATHERS

- ZINC PLATED CAP
- 160 GPM MAXIMUM FLOW

MODEL CODE	DESCRIPTION
57XL10	10 MICRONS
57XL40	40 MICRONS
LC 57XL40	LOCKING CAP, 40 MICRONS
57XL40-3HN	3" HIGH NECK, 40 MICRONS
57XL40-P5	PRESSURIZED 5 PSI, 40 MICRONS
LC 57XL40-P5	LOCKING CAP, PRESSURIZED 5 PSI, 40 MICRONS
AS 57XL40	ANTI-SPLASH, 40 MICRONS
AS 57XL40-P5	ANTI SPLASH, 40 MICRONS, PRESSURIZED 5 PSI

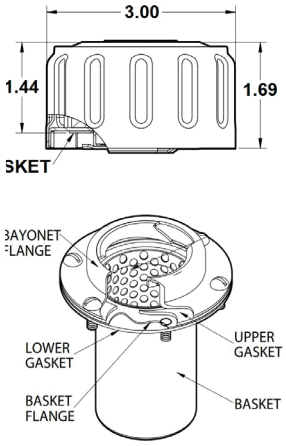

BAYONET, PVC FILLER BREATHER

- ANTI-SPLASH
- 10 MICRONS
- 380 GPM MAXIMUM FLOW

MODEL CODE: ATP0PLSCAR0LI20

NYLON THREADED BREATHERS

- 40 MICRONS (10 MICRONS AVAILABLE)
- OTHER OPTIONS AVAILABLE

MODEL CODE	THREAD	OPTIONS	DIMENSIONS (IN)			
			A	B	C	D
NY-4	1/4 NPT		1.2	1.4	0.8	0.6
NY-6	3/8 NPT					
NY-8	1/2 NPT		1.6			
AS-NY-8		ANTI-SPLASH				
NY-12	3/4 NPT		1.8	1.5	0.9	0.6
AS-NY-12		ANTI-SPLASH				
NY-7-12			2.8	2	1.4	0.7
AS-NY-7-12		ANTI-SPLASH				
NY-7-20	1 1/4 NPT		2.8	2.2	1.4	0.8
AS-NY-7-20		ANTI-SPLASH				
AS-NY-7-20-DIP5"		ANTI-SPLASH + DIPSTICK 5"				

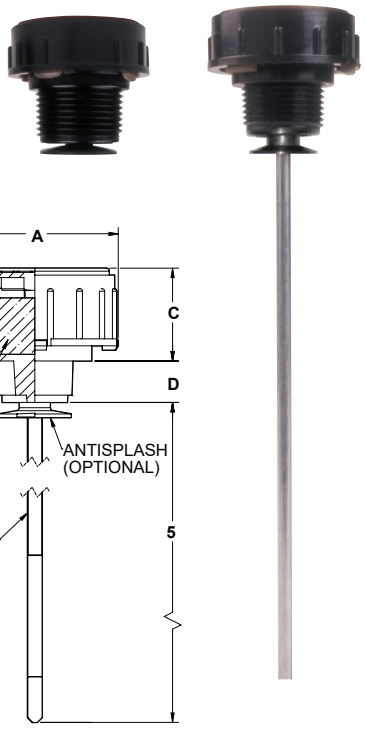

METAL THREADED BREATHERS

- ZINC PLATED CAP
- 40 MICRONS (10 MICRONS AVAILABLE)

MODEL CODE	THREAD	DIMENSIONS (IN)		
		A	B	C
BF-4	1/4 NPT	1.4	1.9	0.7
BF-6	3/8 NPT			
BF-8	1/2 NPT	2.6	2.9	0.9
BF-12	3/4 NPT	2.6	3.0	1.1
BF-12-16		3.0	3.3	1.4
BF-12-16-P5				
BF-16	1" NPT			

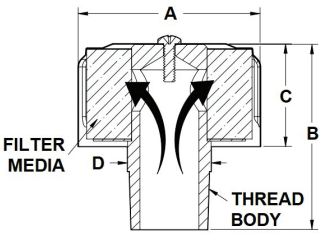

PUSH ON BREATHERS

- 40 MICRONS
- CLIPS ON A 1.5" TUBE

MODEL CODE: NYPO-24

WELD-ON BREATHERS

- 40 MICRONS
- 2.38" TUBE TO WELD ON TANK

MODEL CODE: FB-18

SPIN-ON BREATHERS

- 10 MICRONS PAPER (MANY OPTIONS AVAILABLE)

MODEL CODE	THREAD	MAX CFM	SPARE ELEMENT	ADAPTOR ONLY
LGB-12-10	3/4 NPT	150	CP-752-10	LABA-12
LGB-20-10	1 1/4 NPT	250	CP-1282-10	LABA-20
LGB-B-310	BAYONET	40	CP-AB-310	B12

DESICCANT BREATHERS

- 2 MICRONS RATING
- ABSORB WATER VAPOR
- SILICA GEL TURNS FROM GOLD TO GREEN WHEN MAXIMUM ABSORPTION IS REACHED

MODEL CODE	MAX GPM	MAX H20 CAPACITY
DB-03	262	100 ML
DB-05		200 ML
DB-08		425 ML

DESICCANT BREATHER ADAPTORS

- ADAPT DESICCANT BREATHER TO TANK

MODEL CODE	DESCRIPTION
DB-BA	BAYONET
DB-R2	3/4" NPT

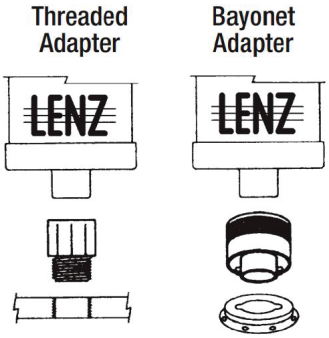

TANK ACCESSORIES

LEVEL GAUGES

- OIL INDICATOR WITH THERMOMETER
- AVAILABLE WITH METRIC BOLT THREAD

MODEL CODE	THREAD	DIMENSIONS (IN)		
		I	H1	H2
T-LLG-3	1/2-13 UNC	3.0	4.2	1.2
T-LLG-5		5.0	6.1	
T-LLG-10		10.0	11.1	1.3

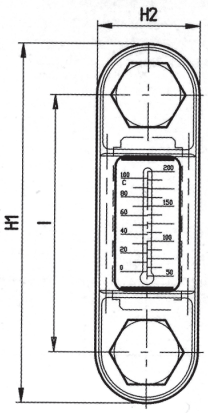

SIGHT WINDOWS

- INDICATE LIQUID LEVEL IN RESERVOIR
- REFLECTOR BALL IN OPTION

MODEL CODE	THREAD
LSW-6	3/8 NPT
LSW-8	1/2 NPT
LSW-A8	SAE-08
LSD-8	1/2 BSP
LSW-12	3/4 NPT

MODEL CODE	THREAD
LSW-16	1" NPT
LSW-16RB*	1" NPT
LSW-20	1 1/4 NPT
LSW-24	1 1/2 NPT
LSW-32	2" NPT

* REFLECTOR BALL

MODEL WITH REFLECTOR

TANK COVERS

- GIVES ACCESS TO INSIDE OF RESERVOIR
- MADE IN STEEL ZINC PLATED
- NO-LEAK GASKET
- DRAIN IN OPTION

MODEL CODE	DIM "A" (IN)
TC-6	6.0
TC-12	12.0
TC-14	14.0

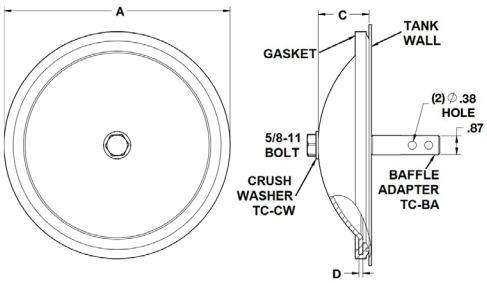

BAFFLE ADAPTER

- LINKS THE TANK COVER TO THE BAFFLE

MODEL CODE: TC-BA

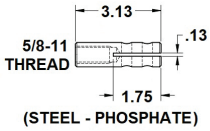

MAGNETIC DRAIN PLUGS

- ATTRACTS FERROUS PARTICLES

MODEL CODE	THREAD
MDP-8	1/2 NPT
MDP-12	3/4 NPT
MDP-16	1 NPT

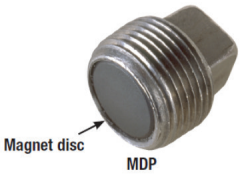

ALSO AVAILABLE

STRAINERS

- PLATED STEEL PIPE NUT
- 100 MESH STAINLESS STEEL WIRE CLOTH
- OPTIONAL BY-PASS VALVE AVAILABLE
- EASILY CLEANABLE AND REUSABLE
- GOOD FOR MANY TYPE OF FLUID

MODEL CODE	MAX GPM	PORT SIZE (A)	DIMENSIONS (INCHES)		
			B	C	D
49-3	3	3/8 NPT	1.2	2.5	1.9
49-4	5	1/2 NPT	1.9	3.1	2.6
49-5	8	3/4 NPT	2.9	3.6	2.6
49-10	10	1" NPT	4.6	5.4	2.6
49-20	20	1 1/4 NPT	6.1	6.9	3.0
49-30	30	1 1/2 NPT	7.2	8.0	3.3
49-50	50	1 1/2 NPT	9.1	9.9	3.9
49-50-2	50	2" NPT	9.1	9.9	3.9
49-75	75	2 1/2 NPT	9.1	10.1	5.1
49-100	100	3" NPT	10.4	11.8	5.1

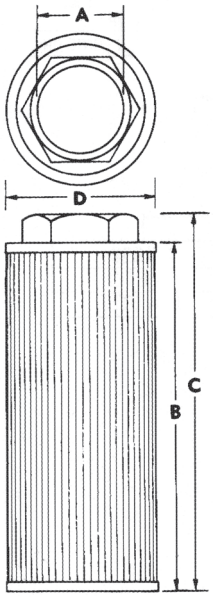

TANK MOUNT STRAINERS

- CAST IRON PIPE NUT
- 100 MESH STAINLESS STEEL WIRE CLOTH
- OPTIONAL BY-PASS VALVE AVAILABLE

MODEL CODE	MAX GPM	PORT SIZE		DIMENSIONS (IN)		
		A	B	C	D	E
LTM-3	3	3/4 NPT	3/8 NPT	4.0	1.0	0.9
LTM-5	5	1" NPT	1/2 NPT	5.4	1.1	1.2
LTM-10	10	1 1/4 NPT	3/4 NPT	8.2	1.2	1.4
LTM-15	15	1 1/2 NPT	1" NPT	8.2	1.2	1.7
LTM-25	25	2" NPT	1 1/4 NPT	9.0	1.4	2.1
LTM-50	50	3" NPT	2" NPT	9.7	1.7	3.0
LTM-100	100	4" NPT	3" NPT	11.3	1.8	4.0

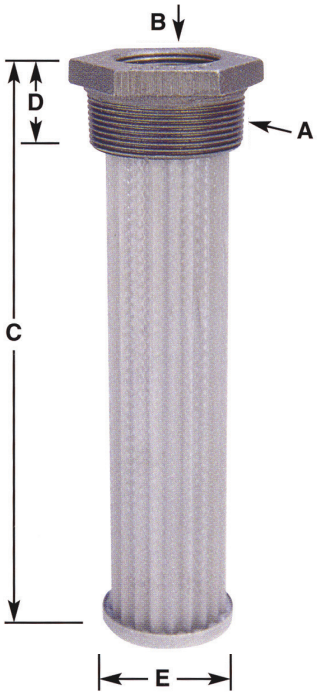

SPIN-ON FILTERS

- CELLULOSE MEDIA FILTER
- OTHER MICRONS AND MEDIA AVAILABLE

PLEASE ADD "T" AFTER MODEL CODE TO INSTALL THE CLOGGING INDICATOR (NOT INCLUDED)

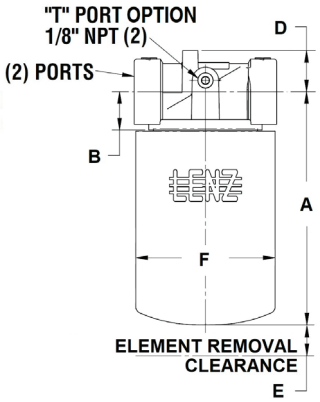

MODEL CODE	PORT SIZE	MAX PSI	MAX GPM	MICRONS	SPARE ELEMENT	POST THREAD	BYPASS PSI	DIMENSIONS (IN)				
								A	B	D	E	F
CP-380-1018	3/8 NPT	200	5	10	CP-1018	3/4-16 UNF	18	3.9	0.7	0.6	0.4	3.1
CP-380-4018				40	CP-4018							
CPA-380-1018	SAE-06			10	CP-1018							
CP-750-10P	3/4 NPT	200	15	10	CP-752-10	1"-12 UNF	15	6.2	1.0	1.1	0.8	3.7
CPA-750-10P	SAE-12											
CP-750-30P	3/4 NPT	200	15	25	CP-752-30	1"-12 UNF	15					
CP-750-100MP			23	100 MESH	CP-752-100M							
CPL-750-10P			15	10	CPL-752-10			9.6				
CP-1280-10P	1 1/4 NPT	150	60	10	CP-1282-10-50	1 1/2-16 UNF	15	8.1	1.5	1.2	1.2	5.0
CPA-1280-10P	SAE-20											
CP-1280-25P	1 1/4 NPT	150	60	25	CP-1282-25-50	1 1/2-16 UNF	15					
CP-1280-100MP				100 MESH	CP-1282-100M							
CPL-1280-10P				10	CPL-1282-10			12.2				

DUAL SPIN-ON FILTERS

- MAXIMUM WORKING PRESSURE: 150 PSI
- BYPASS VA;VE 25 PS
- 1 1/2 NPT PORTS
- SAE PORTS AVAILABLE

FILTER HEAD AND ELEMENTS MUST BE ORDERED SEPARATELY

FILTER HEADS

CP-1501-25

CP-1521-25

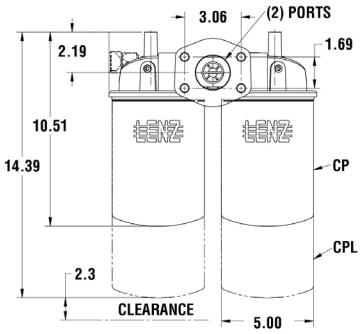

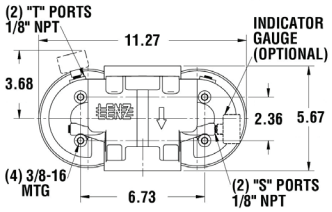

FILTER ELEMENTS (REQUIRES 2 PCS)

MODEL CODE	MAX GPM	MEDIA
CP-1282-10-50	56	10 MICRONS CELLULOSE
CP-1282-25-50		25 MICRONS CELLULOSE
CPL-1282-10-50	72	10 MICRONS CELLULOSE
CPL-1282-10-50		25 MICRONS CELLULOSE

OTHER ELEMENTS AVAILABLE ON REQUEST

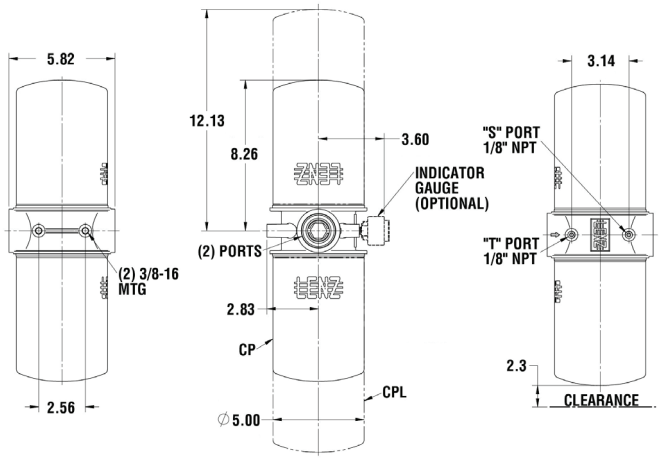

MEDIUM PRESSURE FILTERS

- 350 PSI MAXIMUM WORKING PRESSURE
- BYPASS VALVE 25 PSI
- OTHER MICRONS AND MEDIA AVAILABLE

MODEL CODE	PORT SIZE	MAX GPM	MEDIA	SPARE ELEMENT
DH-750-800RR	3/4 NPT	18	10 MICRONS CELLULOSE	8-03
DH-750-400RR		32	30 MICRONS CELLULOSE	4-03
DH-750-100		35	100 WIRE MESH	5062-100
DH-1250-800RR	1 1/4 NPT	52	10 MICRONS CELLULOSE	8-15
DH-1250-400RR		63	30 MICRONS CELLULOSE	4-15
DH-1500-800RR	1 1/2 NPT	52	10 MICRONS CELLULOSE	8-15
DH-1500-400RR		63	30 MICRONS CELLULOSE	4-15

DH-750 MODELS

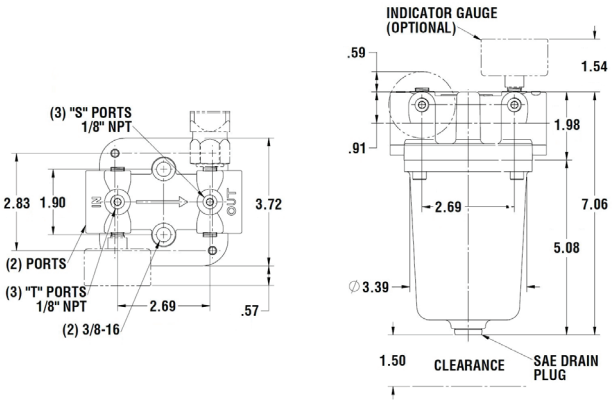

DH-1250 MODELS

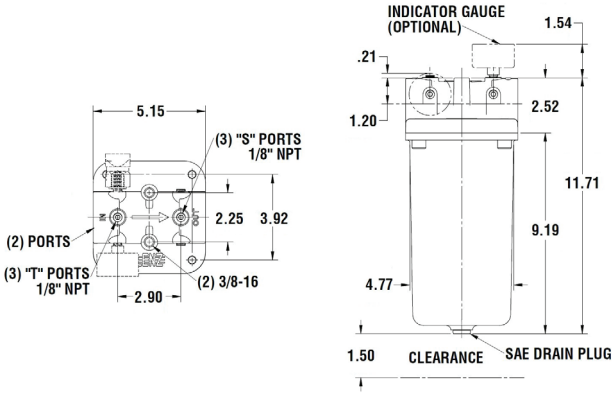

CLOGGING INDICATORS

MC-12
RETURN LINE INDICATING
GAUGE FOR 15 PSI FILTER
APPLICATIONS
2" MULTICOLOR
0-12 PSI GREEN
12-15 PSI YELLOW
15-60 PSI RED (SERVICE FILTER)

MC-20
RETURN LINE INDICATING
GAUGE FOR 25 PSI FILTER
APPLICATIONS
2" MULTICOLOR
0-20 PSI GREEN
21-24 PSI YELLOW
25-60 PSI RED (SERVICE FILTER)

PMA-1-2M-A-SP
ELECTRICAL
SWITCH
ADJUSMENT
RANGE: 2-25 PSI
N.O. SIGNAL
SINGLE SPADE

LENZ TANK MOUNT FILTERS

- MAXIMUM PRESSURE: 100 PSI
- BY-PASS VALVE 25 PSI
- OTHER MICRONS AND MEDIA AVAILABLE

MODEL CODE	PORT SIZE	MAX GPM*	MEDIA	SPARE ELEMENT	BOLT PATTERN
LIT-750-10P	3/4 NPT	24	10 MICRONS CELLULOSE	LIT-752-10P	115 MM
LIT-750-25P			25 MICRONS CELLULOSE	LIT-752-10P	
LIT-750-10SYN	3/4 NPT	16	10 MICRONS SYNTHETIC	LIT-752-10SYN	
LITA-750-10SYN	SAE-12			LIT-752-10SYN	
LIT-1250-10P	1 1/4 NPT	55	10 MICRONS CELLULOSE	LIT-1252-10P	175 MM
LIT-1250-25P			25 MICRONS CELLULOSE	LIT-1252-25P	
LIT-1250-10SYN			10 MICRONS SYNTHETIC	LIT-1252-10SYN	
LITA-1250-10P	SAE-20	55	10 MICRONS CELLULOSE	LIT-1252-10P	
LITA-1250-25P			25 MICRONS CELLULOSE	LIT-1252-25P	
LITA-1250-10SYN			10 MICRONS SYNTHETIC	LIT-1252-10SYN	

*CALCULATED WITH MAX 7.25 PSI DELTA P (FILTER HOUSING + ELEMENT) @ 30 CST VISCOSITY

UFI TANK MOUNT FILTERS

- 43 PSI MAXIMUM WORKING PRESSURE
- BY-PASS VALVE 24 PSI
- OTHER MICRONS AND MEDIA AVAILABLE

MODEL CODE	PORT SIZE	MAX GPM*	MEDIA	SPARE ELEMENT	BOLT PATTERN
FRA31N04BNCC01WX	1/2 NPT	12	10 MICRONS CELLULOSE	ERA31NCC	115 MM
FRA31N04BNCD01WX			25 MICRONS CELLULOSE	ERA31NCD	
FRA31N04BNFC01WX		11	12 MICRONS SYNTHETIC	ERA31NFC	
FRA31S04BNCC01WX	SAE-08	12	10 MICRONS CELLULOSE	ERA31NCC	
FRA31S04BNCD01WX			25 MICRONS CELLULOSE	ERA31NCD	
FRA31S04BNFC01WX		11	12 MICRONS SYNTHETIC	ERA31NFC	
FRA32N06BNCC01WX	3/4 NPT	31.5	10 MICRONS CELLULOSE	ERA32NCC	115 MM
FRA32N06BNCD01WX		39	25 MICRONS CELLULOSE	ERA32NCD	
FRA32N06BNFC01WX		18.5	12 MICRONS SYNTHETIC	ERA32NFC	
FRA32S06BNCC01WX	SAE-12	31.5	10 MICRONS CELLULOSE	ERA32NCC	
FRA32S06BNCD01WX		39	25 MICRONS CELLULOSE	ERA32NCD	
FRA32S06BNFC01WX		18.5	12 MICRONS SYNTHETIC	ERA32NFC	
FRA32N08BNFD01WX	1" NPT	29.5	21 MICRONS SYNTHETIC	ERA32NFD	
FRA41N10BNCC01WX	1 1/4 NPT	71	10 MICRONS CELLULOSE	ERA41NCC	175 MM
FRA41N10BNCD01WX		78	25 MICRONS CELLULOSE	ERA41NCD	
FRA41N10BNFC01WX		50	12 MICRONS SYNTHETIC	ERA41NFC	
FRA41N10BNFD01WX		66	21 MICRONS SYNTHETIC	ERA41NFD	
FRA41N10BNME01WX		78	60 WIRE MESH	ERA41NME	
FRA41S10BNCC01WX	SAE-20	71	10 MICRONS CELLULOSE	ERA41NCC	
FRA41S10BNCD01WX		78	25 MICRONS CELLULOSE	ERA41NCD	
FRA41S10BNFC01WX		50	12 MICRONS SYNTHETIC	ERA41NFC	

*CALCULATED WITH MAX 7.25 PSI DELTA P (FILTER HOUSING + ELEMENT) @ 30 CST VISCOSITY

RETURN FILTERS FOR PADOAN TANKS

- MICROFIBER ELEMENTS (60* MICRONS IS WIRE MESH)
- BY-PASS VALVE 24 PSI
- OTHER MICRONS AND MEDIA AVAILABLE

AFO0IMM MODELS

MF135 FLANGE (FOR 8-13 GALLONS RESERVOIRS)

MODEL CODE	PORT SIZE	MAX PSI	MAX GPM*	MICRONS	SPARE ELEMENT	BOLT PATTERN
AFO0IMM134103F2	1" NPT MALE	43	33	21	AFO0ELF142070F2	115 MM
AFO0IMM134103ST			40	60*	AFO0ELF142070RM	
AFO0SEM135101F2	1" NPT	116	33	21	AFO0ELF13007025	
AFO0SEM135101ST			40	60*	AFO0ELF128070BF	

MF135 FLANGE (FOR 18+ GALLONS RESERVOIRS)

MODEL CODE	PORT SIZE	MAX PSI	MAX GPM*	MICRONS	SPARE ELEMENT	BOLT PATTERN
AFO0IMM134102F1	1" NPT MALE	43	39	10	AFO0ELF205070F1	115 MM
AFO0IMM134102F2			48	21	AFO0ELF205070F2	
AFO0IMM134102ST			58	60	AFO0ELF13007025	
AFO0SEM137125F1	1 1/4 NPT	116	39	10	AFO0ELF205070F1	
AFO0SEM137125F2			53	21	AFO0ELF205070F2	
AFO0SEM137125RM			66	60*	AFO0ELF205070RM	

MF195 FLANGE

MODEL CODE	PORT SIZE	MAX PSI	MAX GPM*	MICRONS	SPARE ELEMENT	BOLT PATTERN
AFO0SEM196125F1	1 1/4 NPT	116	53	10	AFO0ELF211099F1	175 MM
AFO0SEM196125F2			66	21	AFO0ELF211099F2	
AFO0SEM196125CL			79	60*	AFO0ELF210100RM	

*CALCULATED WITH MAX 7.25 PSI DELTA P (FILTER HOUSING + ELEMENT) @ 30 CST VISCOSITY

AFO0SEM MODELS

PADOAN EASY KITS FOR TIPPING VALVES

- 43 PSI MAXIMUM WORKING PRESSURE
- BY-PASS VALVE 24 PSI
- 135 MM BOLT PATTERN
- OTHER MICRONS AND MEDIAS AVAILABLE

MODEL CODE	MAX GPM*	MICRONS	SPARE ELEMENT
AKV0VDS0MF250CF	60	40	AFO0ELF205070CF

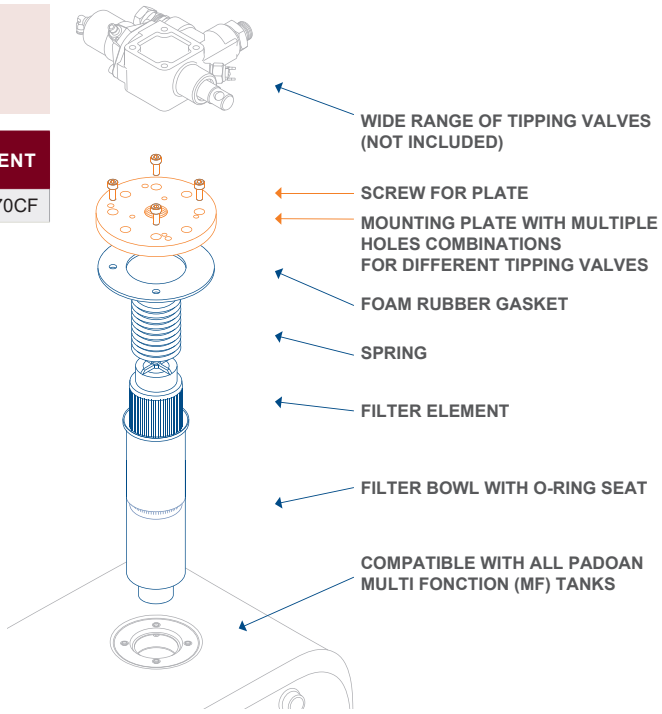

PRESSURE FILTERS

- BYPASS VALVE 87 PSI
- VISUAL CLOGGING INDICATOR 72.5 PSI
- FIBERGLASS MEDIA ELEMENTS, BETA 1000 (99.9% EFFICIENCY)
- OTHER CHOICES OF ELEMENTS AVAILABLE

MODEL CODE	PORT SIZE (D1)	MAX GPM*	MAX PSI	MICRONS	SPARE ELEMENT
FPB13 S04 CNFC5EXX	SAE-08	15	6090	12	EPB13NFC
FPB13 S06 CNFC5EXX	SAE-12				EPB13NFC
FPB21 S06 CNFC5EXX	SAE-12	12	6090	12	EPB21NFC
FPB22 S06 CNFC5EXX	SAE-12	25			EPB22NFC
FPB31 S08 CNFC5EXX	SAE-16	35	6090	12	EPB31NFC
FPB31 S10 CNFC5EXX	SAE-20	12			EPB31NFC
FPB32 S10 CNFC5EXX	SAE-20	74			EPB32NFC
FPB35 G10 CNFA03XX	CF61-1 1/4	70	6090	5	EPB35NFA
FPB35 F12 CNFA03XX	CF61-1 1/2	85			EPB35NFA
FPC51 S06 CNFC5ECX	SAE-12	20	5510	12	EPC51NFC
FPC55 S08 CNFC5ECX	SAE-16	31			EPC55NFC

*CALCULATED WITH MAX 7.25 PSI DELTA P (FILTER HOUSING + ELEMENT) @ 30 CST VISCOSITY

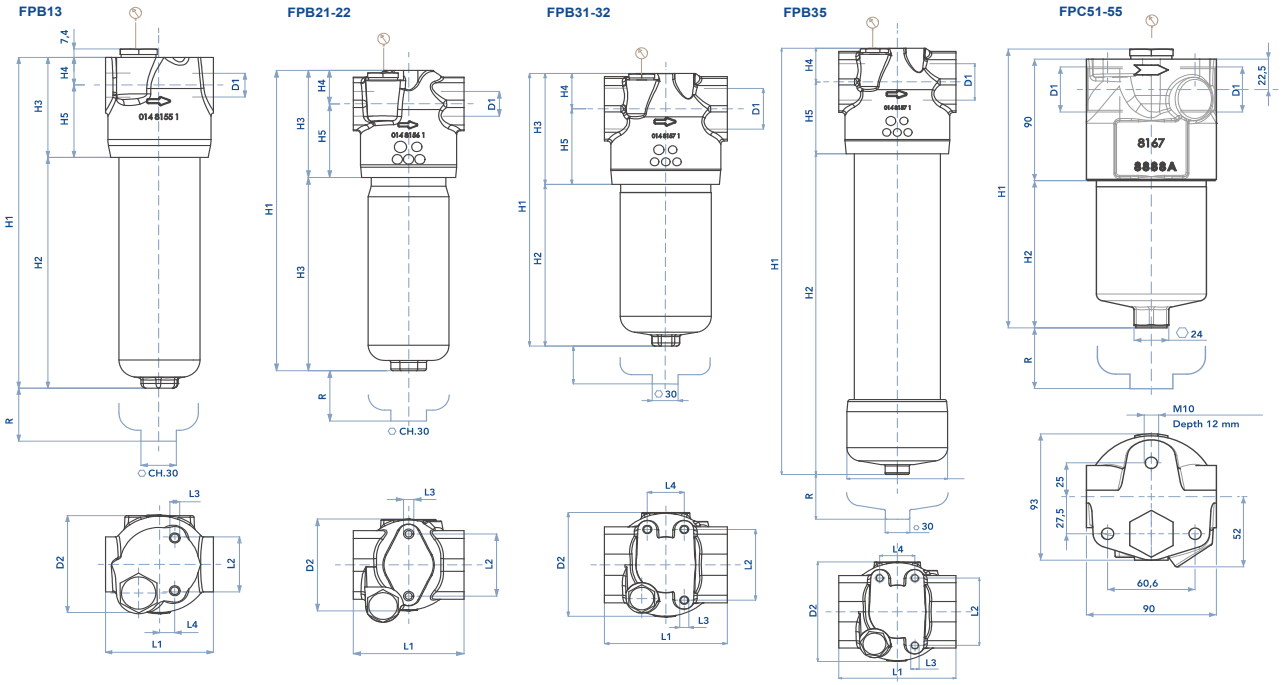

MODELS	DIMENSIONS (IN)											WEIGHT (LBS)
	D2	H1	H2	H3	H4	H5	L1	L2	L3	L4	R	
FPB13	3.39	11.65	8.23	3.43	0.95	2.48	3.46	1.81	M8	0.49	3.94	11.5
FPB21	3.70	8.90	4.57	4.41	1.38	3.03	4.25	2.56	M8	-	3.94	14.6
FPB22	3.70	12.48	8.15	4.41	1.38	3.03	4.25	2.56	M8	-	3.94	18.1
FPB31	5.04	9.65	4.21	5.43	1.73	3.70	5.63	3.46	M10	1.69	3.94	24.3
FPB32	5.04	13.27	7.83	5.43	1.73	3.70	5.63	3.46	M10	1.69	3.94	30.6
FPB35	5.04	25.91	20.47	5.43	1.73	3.70	5.63	3.46	M10	1.69	3.94	55.1
FPC51	-	8.15	4.29	-	-	-	-	-	-	-	-	9.3
FPC55	-	12.08	8.27	-	-	-	-	-	-	-	-	11.7

JIC TYPE

EACH STYLE T1 TANK INCLUDES:

- OIL LEVEL & TEMP. GAUGE HOLES
- FILLER BREATHER RISER
- 2 STEEL END-COVERS WITH GASKETS
- BAFFLE WITH CUTOUTS FOR CIRCULATION
- 3/4" SAE DRAIN IN END COVER
- EXTERIOR OF TANK PRIME PAINTED
- INTERIOR OF TANK COATED WITH RUST REVENTIVE OIL

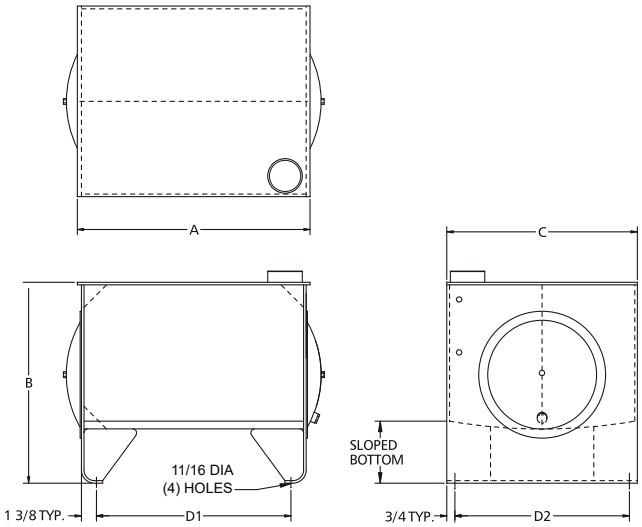

PART NUMBER	CAPACITY GALLONS	TANK DIMENSIONS (INCHES)						MATERIAL THICKNESS		WEIGHT LBS
		A LENGTH	B HEIGHT	C WIDTH	MOUNTING CENTERS		END COVER			
					D1±1/8	D2±1/8		END	TOP	
T1.15	15	26.0	19.38	18.0	22.25	16.5	12.0	7 GA	7 GA	105
T1.20	20	30.0	19.38	18.0	26.25	16.5	12.0	7 GA	7 GA	125
T1.30	30	36.0	19.38	24.0	32.25	22.5	12.0	7 GA	7 GA	178
T1.40	40	36.0	21.0	24.0	32.25	22.5	12.0	7 GA	7 GA	190
T1.50	50	36.0	23.0	24.0	32.25	22.5	16.0	7 GA	7 GA	200
T1.60	60	48.0	20.68	27.0	44.25	25.5	16.0	7 GA	3/8"	314
T1.80	80	60.0	21.5	27.0	56.25	25.5	16.0	7 GA	3/8"	398
T1.100	100	60.0	23.5	27.0	56.25	25.5	16.0	7 GA	3/8"	418

VERTICAL TANKS - IMMERSED PUMP INSTALLATION

TV TANK INCLUDES:

- OIL LEVEL & TEMP. GAUGE MOUNTING HOLES
- 4 COVER MOUNTING BOLTS
- CHANNEL GASKET FOR COVER PLATE
- 3/4" SAE DRAIN
- OUTSIDE OF TANK PRIME PAINTED
- INTERIOR OF TANK COATED WITH RUST PREVENTIVE OIL

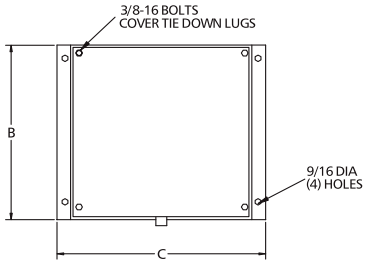

TOP COVER MUST BE ORDERED SEPARATELY

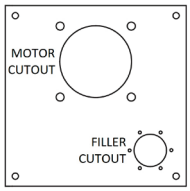

FITS BAYONET STYLE
FILLER-BREATHER

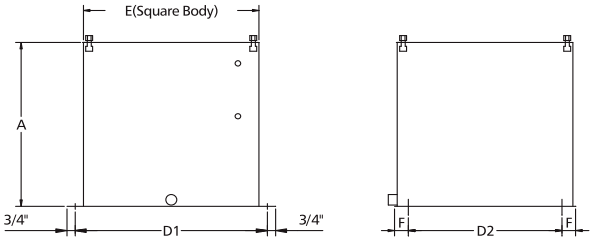

PART NUMBER	CAPACITY GALLONS	DIMENSIONS (IN)							WEIGHT LBS	TOP COVER		
		A	B	C	D1±1/8	D2±1/8	E	F		WITH FILLER CUTOUT	FILLER + 56/145TC CUTOUT	FILLER + 182/256TC CUTOUT
TV-173	10	15.5	17.5	20.0	18.75	15.0	17.0	1.25	65	TVL-934A	TVL-937A	TVL-943A
TV-174	20	18.5	18.0	20.5	19.25	15.0	17.5	1.5	80	TVL-949	TVL-952	TVL-955
TV-175	30	26.5	18.0	20.5	19.25	15.0	17.5	1.5	100			

26/36 SERIE - SADDLEMOUNT INSTALLATION

- MADE OF STEEL
- WELDED MOUNTING BRACKET
- LEVEL GAUGE INCLUDED
- RETURN COVER FLANGE INCLUDED
- USE WITH COMMON BAYONET FILLER-BREATHER

FOR MORE DETAILS

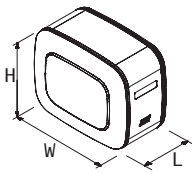

MODEL CODE	CAPACITY GALLONS	DIMENSIONS (IN)			SUCCION CONNECTION	RETURN FILTER BOLT PATTERN
		L	H	W		
NSOF0030036US00	8	14.4	10.2	14.2	1 1/4 NPT	115 MM
NSOF0050046US00	11	18.3				
NSOF0050056US00	13	22.3				

26/36 SERIE - UPRIGHT INSTALLATION

- MADE OF STEEL
- WELDED MOUNTING BRACKET
- LEVEL GAUGE INCLUDED
- RETURN COVER FLANGE INCLUDED
- USE WITH COMMON BAYONET FILLER-BREATHER

FOR MORE DETAILS

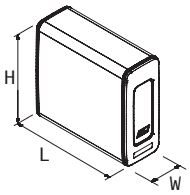

MODEL CODE	CAPACITY GALLONS	DIMENSIONS (IN)			SUCCION CONNECTION	RETURN FILTER BOLT PATTERN
		L	H	W		
NSOF0050046US01	11	18.3	14.2	10.2	1 1/4 NPT	115 MM
NSOF0050056US01	13	22.3				

44/54 SERIE - SADDLEMOUNT INSTALLATION

- MADE OF ALUMINUM
- LEVEL GAUGE INCLUDED
- RETURN COVER FLANGE INCLUDED
- USE WITH COMMON BAYONET FILLER-BREATHER

FOR MORE DETAILS

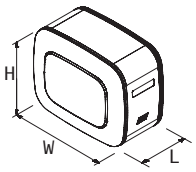

MODEL CODE	CAPACITY GALLONS	DIMENSIONS (IN)			SUCCION CONNECTION	RETURN CONNECTION	RETURN FILTER BOLT PATTERN
		L	H	W			
NSOA0070035US00	18	13.8	17.6	21.5	1 1/2 NPT	1 1/4 NPT	115 MM

50/64 SERIE

- SADDLEMOUNT OR UPRIGHT INSTALLATION
- LEVEL GAUGE INCLUDED
- RETURN COVER FLANGE INCLUDED
- USE WITH COMMON BAYONET FILLER-BREATHER

FOR MORE DETAILS

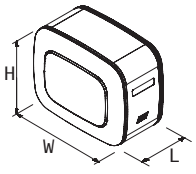

MODEL CODE	MATERIAL	CAPACITY GALLONS	DIMENSIONS (IN)			SUCCION CONNECTION	RETURN CONNECTION	RETURN FILTER BOLT PATTERN
			L	H	W			
NSOF0100040US00	STEEL	28	15.7	20.0	25.1	1 1/2 NPT	1 1/4 NPT	115 MM
NSOA0100040US00	ALUMINUM							
NSOF0120045US00	STEEL	32	17.7					
NSOA0120045US00	ALUMINUM							
NSOF0150055US00	STEEL	40	21.6					
NSOA0150055US00	ALUMINUM							

63/70 SERIE

- SADDLEMOUNT OR UPRIGHT INSTALLATION
- LEVEL GAUGE INCLUDED
- RETURN COVER FLANGE INCLUDED
- USE WITH COMMON BAYONET FILLER-BREATHER

FOR MORE DETAILS

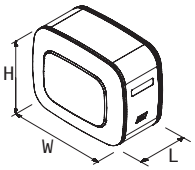

MODEL CODE	MATERIAL	CAPACITY GALLONS	DIMENSIONS (IN)			SUCCION CONNECTION	RETURN CONNECTION	RETURN FILTER BOLT PATTERN
			L	H	W			
NSOF0135035US00	STEEL	35	13.7	25.1	27.9	1 1/2 NPT	1 1/4 NPT	115 MM
NSOF0200050US00	STEEL	51	19.7			2" NPT		
NSOA0200050US00	ALUMINUM							
NSOA0300073US00	ALUMINUM	80	28.9			2" NPT	1 1/4 NPT	175 MM
NSOF0400100US00	STEEL	106	39.4			2" NPT	2" NPT	

BRACKETS - SADDLEMOUNT

- STAINLESS STEEL STRAPS

MODEL CODE	SERIE
AKMISLT44544000	44/54
AKMISLT50645000	50/64
AKMISLT06307005	63/70

BRACKETS - UPRIGHT

- STAINLESS STEEL STRAPS

MODEL CODE	SERIE
AKMISRC50645000	50/64
AKMISRC06307005	63/70

63/27 SERIE - UPRIGHT INSTALLATION

- UPRIGHT BRACKET INCLUDED
- LEVEL GAUGE INCLUDED
- RETURN COVER FLANGE INCLUDED
- USE WITH COMMON BAYONET FILLER-BREATHER

FOR MORE DETAILS

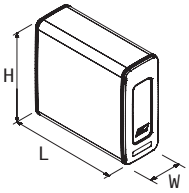

MODEL CODE	MATERIAL	CAPACITY GALLONS	DIMENSIONS (IN)			SUCCION CONNECTION	RETURN FILTER BOLT PATTERN
			L	H	W		
NSOF0200126US00	STEEL	53	49.7	25.1	10.7	2X 2" NPT	115 MM
NSOA0200126US00	ALUMINUM						
NSOA0250156US00	ALUMINUM	66	61.5				175 MM

64/50 SERIE - UPRIGHT INSTALLATION

- MADE OF ALUMINUM
- UPRIGHT BRACKET WITH SHOCK ABSORBER
- LEVEL GAUGE INCLUDED
- RETURN COVER FLANGE INCLUDED (2X)
- USE WITH COMMON BAYONET FILLER-BREATHER

FOR MORE DETAILS

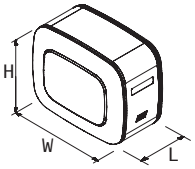

MODEL CODE	CAPACITY GALLONS	DIMENSIONS (IN)			SUCCION CONNECTION	RETURN FILTER BOLT PATTERN
		L	H	W		
NSOA0285100US00-K	75	39.4	25.1	21.0	3" NPT (2" NPT)*	115 MM 2 RETURNS
NSOA0375130US00-K	100	51.2				

* NPT ADAPTOR FROM 3" TO 2" NPT INCLUDED

E•MC®

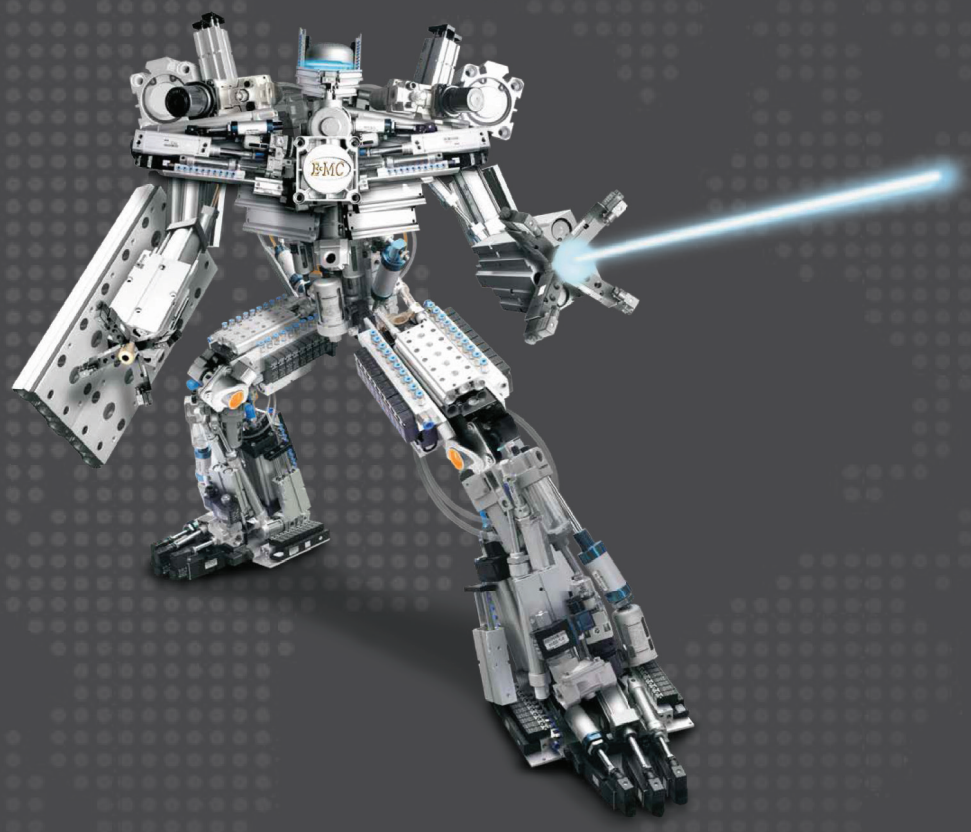

DEVOTED TO
PROVIDING GLOBAL AUTOMATION SOLUTIONS.

// Pneumatic Components & Systems

// Solenoid Valves

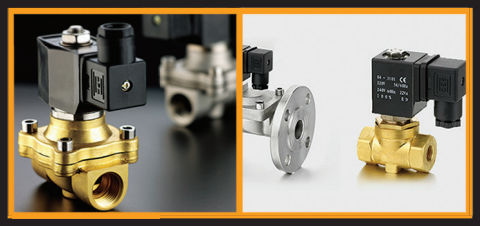

// Automation Solutions

OUR MISSION IS FOR YOU **TO ACHIEVE YOUR GOALS** BY PROVIDING INNOVATIVE & QUALITY PRODUCTS.

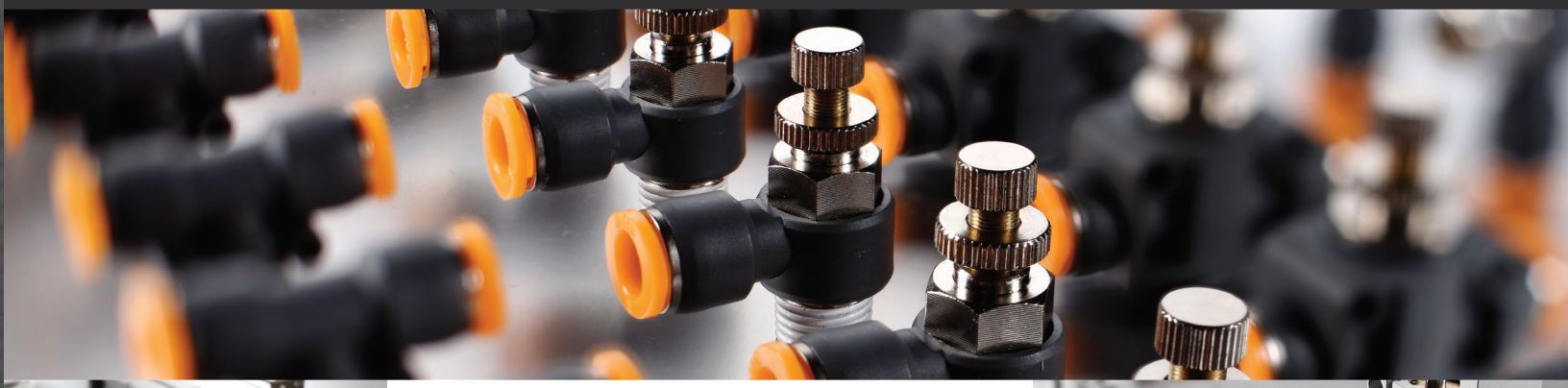

E•MC®

SLP SERIES

NORMAL OPEN


SLP H SMALL ORIFICE


SLP-HS1 SMALL ORIFICE


SLP H


SLP HS1

NORMAL CLOSE


SLP-08


SLP


SLP-S1


SLPF-S1

HOW TO ORDER

Series No.	Port Size	Original Status	Orifice	ID Code	Voltage	Valve Body Material	Seal Material	Thread Type
SLP: Thread connection SLPF: Flange connection	06: 1/8 " 08: 1/4 " 10: 3/8 " 15: 1/2 " 20: 3/4 " 25: 1 " 32: 1–1/4 " 40: 1–1/2 " 50: 2 "	Blank: NC H: NO	010: 1mm 015: 1.5mm 025: 2.5mm 030: 3mm 040: 4mm 105: 10.5mm 130: 13mm 200: 20mm 250: 25mm 320: 32mm 400: 40mm 500: 50mm 650: 65mm 800: 80mm 1000: 100mm	Blank: Standard type N: Low power type	E1: AC110V E2: AC220V E3: AC380V E4: DC24V E5: DC12V E6: AC36V E7: AC24V E8: DC110V E9: DC48V E10: DC36V	Blank: Brass S1: SS316	Blank: NBR E: EPDM V: VITON	Blank: G P: PT T: NPT

ORDER EXAMPLE:
SLP SERIES SOLENOID VALVE, 1/2 PORT SIZE, NC, 13MM ORIFICE, STANDARD TYPE, AC110V, BRASS VALVE BODY, NBR SEAL, G THREAD, ERP CODE IS: SLP15-130E1

EMCJ SERIES

HOW TO ORDER

Series No.	Port Size	Actuator Size	Acting Type	Valve Body Material	Thread Type
EMCJ: Stainless Steel Series Angle Valve	10: 3/8 " 15: 1/2 " 20: 3/4 " 25: 1 " 32: 1–1/4 " 40: 1–1/2 " 50: 2 "	40: Φ40mm 50: Φ50mm 63: Φ63mm 80: Φ80mm 100: Φ100mm	Blank: NC Single Acting H: NO Single Acting D: Double acting	S1: SS316 S2: SS304	Blank: G P: PT T: NPT


EMCJ SERIES FULL STAINLESS STEEL SERIES ANGLE VALVE

ORDER EXAMPLE:
EMCJ SERIES FULL STAINLESS STEEL ANGLE SEAT VALVE, 3/8 PORT SIZE, 40MM ACTUATOR SIZE, NC SINGLE ACTING, SS316 VALVE BODY, G THREAD, ERP CODE IS: EMCJ-10-40S1

EMCP SERIES

HOW TO ORDER

Series No .	Port Size	Actuator Size	Acting Type	Valve Body Material	Thread Type
EMCP： Polymer Actuator Angle Valve	15：1/2 " 20：3/4 " 25：1 " 32：1-1/4 " 40：1-1/2 " 50：2 "	50：Φ50mm 63：Φ63mm 80：Φ80mm 100：Φ100mm	Blank：NC Single Acting H: NO Single Acting D: Double acting	S1：SS316 S2：SS304	Blank：G P：PT T：NPT


EMCP POLYMER ACTUATOR SERIES ANGLE VALVE

ORDER EXAMPLE:
EMCP, ¾ PORT SIZE, 63 ACTUATOR SIZE, H NO SINGLE ACTING, S2 BODY MATERIAL, T NPT THREAD TYPE

THP SERIES 2/2 SOLENOID VALVE (STEAM VALVES)

THP-15TE2

THP-15TE2S2

HOW TO ORDER

Series No.	Port Size	Original Status	Orifice	ID Code	Voltage	Valve Body Material	Connection Mode	Seal Material	Thread Type
THP Series	06: 1/8" 08: 1/4" 10: 3/8" 15: 1/2" 20: 3/4" 25: 1" 35: 1–1/4" 40: 1–1/2" 50: 2" 25F: 1" Flange 35F: 1–1/4" Flange 40F: 1–1/2" Flange 50F: 2" Flange	Blank: NC H: NO	2.5L: 2.5mm 4.5L: 4.5mm 15L: 15mm 35L: 35mm 45L: 45mm 20L: 20mm 25L: 25mm 35L: 35mm (Cancel if with same port size)	Blank: Standard type	E1: AC110V E2: AC220V E3: AC380V E4: DC24V E5: DC12V E6: AC36V E7: AC24V E8: DC110V E9: DC48V E10: DC36V	Blank: Brass S1: SS316 S2: SS304	Blank: DIN Connector F: Flying leads	Blank: NBR T: Teflon V: VITON E: EPDM	Blank: G P: PT T: NPT

ORDER EXAMPLE:
THP SERIES, 2 POSITION, 2 PORT, AC 110V, 1/8"PORT SIZE, ORIFICE: 2.5MM, BRASS, NORMAL CLOSE, NBR SEAL, DIN COIL, ERP CODE IS: THP06E1-2.5L

ESV SERIES 3/2 WAY DIRECT ACTING SOLENOID VALVE (NORMALY CLOSE)

HOW TO ORDER

Series No.	Control Style	Port Size	Orifice	ID Code	Voltage	Valve Body Material	Coil Type	Seal Material	Thread Type
ESV Series ESV–N Series energy–saving solenoid valve (Voltage: 8–30VDC, Power: 2–6W)	1: Normal Close 2: Normal Open 3: Universal Type	06: 1/8 " 08: 1/4 "	1.5L: 1.5mm 2L: 2mm 2.5L: 2.5mm 3L: 3mm 4L: 4mm 5L: 5mm	Blank: Standard type N: Energy saving type	E1: AC110V E2: AC220V E4: DC24V E5: DC12V E7: AC24V	Blank: Brass S2: SUS304	Blank: DIN Type F: Flying Leads	Blank: NBR E: EPDM V: VITON	Blank: G P: PT T: NPT

ORDER EXAMPLE:
ESV SERIES, 2 POSITION, 3 PORT, NORMAL CLOSE, AC110V,1/8" PORT SIZE, ORIFICE:1.5MM, BRASS VALVE BODY, NBR SEAL, THE ERP CODE IS: ESV1-06-1.5LE1

NBC SERIES NFPA INTERCHANGEABLE

- MAX WORKING PRESSURE: 145 PSI
- NFPA INTERCHANGEABLE WITH MAJOR BRANDS
- INTEGRATED AIR CUSHIONS
- INTEGRATED MAGNET ON PISTON

NBC40×0200-S

HOW TO ORDER

Series No. — NB: Profile barrel (North American Standard)

Cushion Type — C: Air cushion

Type No. — Blank: Basic type; D: Double shaft type; J: Double shaft and adjustable type

Bore — 40(1-1/2"), 50(2"), 63(2-1/2"), 80(3-1/4"), 100(4")

X

Stroke — *Stroke length must be indicated as 4 digits. First and second digit:Stroke/Inch; Third and fourth digit:Stroke/Hundredth of an inch. Example) 0525=5.25(5–1/4) inch stroke. Details in stroke chart

–

Magnet No. — Blank: No magnet; S: With magnet

–

Seal Material — Blank: Standard material (NBR seal); V: VITON seal

–

Mounting Type — Blank: No; LB; CA; CB; FA; FB; YJ

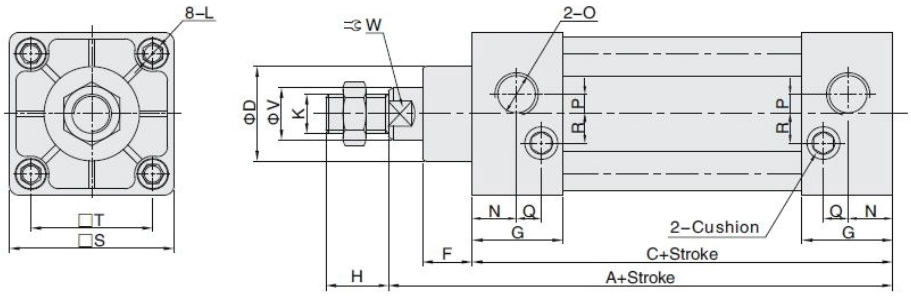

(inch)

Bore	A	C	D	F	G	H	K	L	N	O	P	Q	R	S	T	V	W
40(1–1/2")	4.625	3.625	1.26	0.59	1.08	0.75	UNF 7/16–20–2A	M6	0.53	NPT1/4	0.197	0.216	0.35	1.97	1.457	0.63	0.50
50(2")	4.625	3.625	1.496	0.59	1.08	0.75	UNF 7/16–20–2A	M6	0.57	NPT1/4	0.335	0.118	0.433	2.44	1.85	0.787	0.50
63(2–1/2")	4.75	3.75	1.496	0.59	1.08	0.75	UNF 7/16–20–2A	M8	0.59	NPT3/8	0.28	0.197	0.374	2.95	2.205	0.787	0.50
80(3–1/4")	5.625	4.25	1.811	0.827	1.30	1.125	UNF 3/4–16–2A	M10	0.65	NPT3/8	0.28	0.31	0.39	3.70	2.756	0.984	0.87
100(4")	5.625	4.25	1.811	0.827	1.30	1.125	UNF 3/4–16–2A	M10	0.65	NPT1/2	0.30	0.31	0.51	4.41	3.307	0.984	0.87

NBC MOUNTING ACCESSORIES

NBC□–MSI

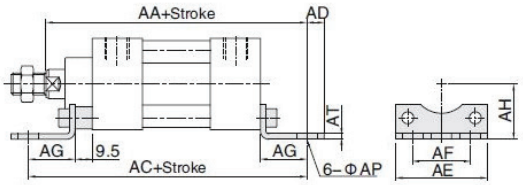

NBC□–MF1

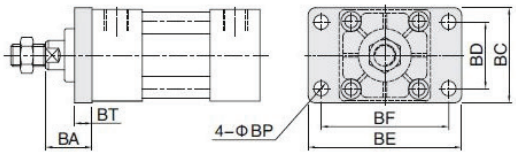

NBC□–MF2

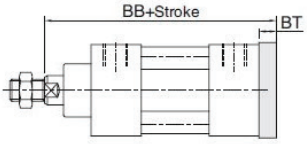

(inch)

Bore	AA	AC	AD	AE	AF	AG	AH	AP	AT
40(1–1/2")	5.625	6.00	0.38	1.97	1.25	1.00	1.188	0.44	0.12
50(2")	5.625	6.00	0.38	2.44	1.75	1.00	1.438	0.44	0.12
63(2–1/2")	5.75	6.125	0.38	2.95	2.25	1.00	1.625	0.44	0.12
80(3–1/4")	6.875	7.375	0.50	3.74	2.75	1.25	1.938	0.56	0.16
100(4")	6.875	7.375	0.50	4.41	3.50	1.25	2.25	0.56	0.16

(inch)

Bore	BA	BB	BC	BD	BE	BF	BP	BT
40(1–1/2")	1.00	5.00	2.05	1.43	3.31	2.75	0.315	0.375
50(2")	1.00	5.00	2.56	1.84	4.13	3.375	0.375	0.375
63(2–1/2")	1.00	5.125	2.87	2.19	4.57	3.875	0.375	0.375
80(3–1/4")	1.375	6.25	3.62	2.76	5.63	4.685	0.435	0.63
100(4")	1.375	6.25	4.50	3.31	6.34	5.435	0.435	0.63

NBC□-MP2

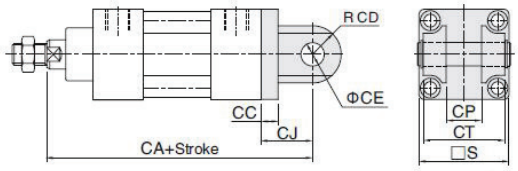

NBC□-MP4

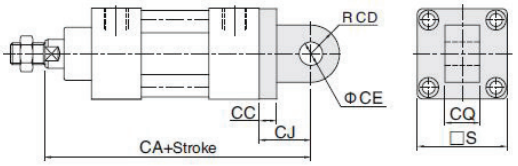

(inch)

Bore	CA	CC	CD	CE	CJ	CP	CQ	CT	S
40(1-1/2")	5.75	0.38	0.62	0.50	1.125	0.765	0.75	1.765	1.95
50(2")	5.75	0.38	0.62	0.50	1.125	0.765	0.75	1.765	2.42
63(2-1/2")	5.875	0.38	0.62	0.50	1.125	0.765	0.75	1.765	2.93
80(3-1/4")	7.50	0.63	0.87	0.75	1.875	1.265	1.25	2.515	3.66
100(4")	7.50	0.63	0.87	0.75	1.875	1.265	1.25	2.515	4.37

NBC□-YJ

PART NO: NBC40-YJ (40, 50, 63 BORE SIZES)
NBC80-YJ (80,100 BORE SIZES)

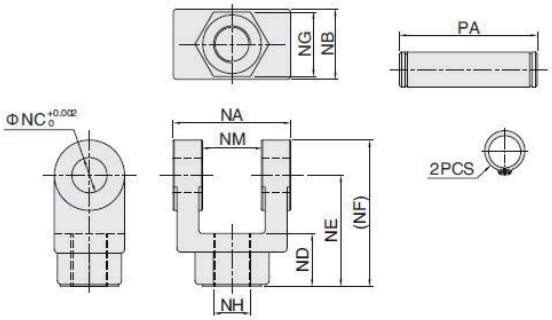

(inch)

Bore	NA	NB	NC	ND	NE	NF	NG	NH	NM	PA
40(1-1/2")	1.764	1.00	0.504	0.75	1.5	2.0	1.0	UNF-7/16-20-2A	0.764	2.17
50(2")	1.764	1.00	0.504	0.75	1.5	2.0	1.0	UNF-7/16-20-2A	0.764	2.17
63(2-1/2")	1.764	1.00	0.504	0.75	1.5	2.0	1.0	UNF-7/16-20-2A	0.764	2.17
80(3-1/4")	2.516	1.50	0.752	1.13	2.37	3.13	1.37	UNF 3/4-16-2A	1.264	2.95
100(4")	2.516	1.50	0.752	1.13	2.37	3.13	1.37	UNF 3/4-16-2A	1.264	2.95

FVBC SERIES ISO6431 / ISO15552

- MAX WORKING PRESSURE: 145 PSI
- ISO INTERCHANGEABLE WITH MAJOR BRANDS
- INTEGRATED AIR CUSHIONS
- INTEGRATED MAGNET ON PISTON

FVBC32X50-S

HOW TO ORDER

Series No. — FVB: Square barrel; FXB: Profile barrel

Cushion Type — C: Air cushion

Type No. — Blank: Basic type; D: Double shaft type; J: Double shaft and adjustable stroke type

Bore — 32, 40, 50, 63, 80, 100

X

Stroke — 25, 50, 75, …

— Adjustable Stroke — 10, 20, 30, 40, 50, 75, 100

— Magnet No. — Blank: No magnet; S: With magnet

— Seal Material — Blank: TPU seal

— Mounting Type — Blank: No; CA, CB, CR, LB, FA, FB; IJ, YJ, YCJ, BJ, FD

— Thread Type — Blank: G; P: PT; T: NPT

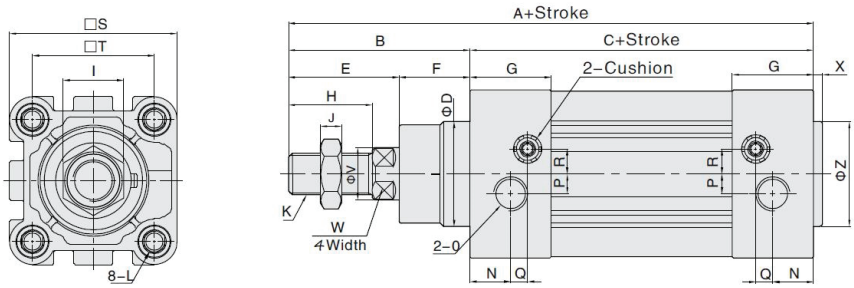

(mm)

Bore/Sign	A	B	C	D	E	F	G	H	I	J	K	L	N	O	P	Q	R	S	T	V	W	X	Z
32	142	48	94	30	29	19	27.5	22	17	6	M10x1.25	M6	13	1/8"	5.5	6	6	46.5	32.5	12	10	3	30
40	159	54	105	35	33	21	32	24	17	7	M12x1.25	M6	17	1/4"	6	7.5	8.5	54	38	16	13	3.5	35
50	175	69	106	40	42	27	31	32	23	8	M16x1.5	M8	15.5	1/4"	7.5	6.5	9.5	64	46.5	20	17	3.5	40
63	190	69	121	45	42	27	33	32	23	8	M16x1.5	M8	16.5	3/8"	7.5	7.5	11.5	75	56.5	20	17	4	45
80	214	86	128	45	53	33	33	40	26	10	M20x1.5	M10	16.5	3/8"	8	8.5	12.5	93	72	25	22	4	45
100	229	91	138	55	55	36	37	40	26	10	M20x1.5	M10	19.5	1/2"	10	7	12	110	89	25	22	4	55

MOUNTING ACCESSORIES

Model\Sign	AA	AC	AD	AE	AF	AG	AH	AP	AT
FJ–VBC32LB	158	142	8	47	32	24	32	7	4
FJ–VBC40LB	179	161	9	53	36	28	36	9	4
FJ–VBC50LB	190	170	10	65	45	32	45	9	5
FJ–VBC63LB	209	185	12	75	50	32	50	9	5
FJ–VBC80LB	248	210	19	95	63	41	63	12.5	6
FJ–VBC100LB	258	220	19	115	75	41	71	14.5	6

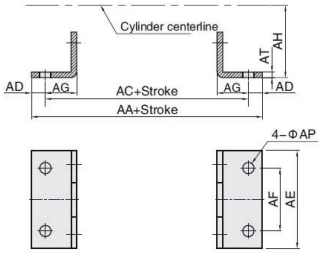

Model\Sign	AJ	AK	BA	BB	BC	BD	BE	BF	BH	BP	T
FJ–VBC32FA	11	7	30.5	10	47	32	80	64	4.5	7	32.5
FJ–VBC40FA	11	7	35.5	10	53	36	90	72	4.5	9	38
FJ–VBC50FA	14	9	40.5	12	65	45	110	90	5.5	9	46.5
FJ–VBC63FA	14	9	45.5	12	75	50	125	100	5.5	9	56.5
FJ–VBC80FA	17	11	45.5	16	95	63	154	126	7	12.5	72
FJ–VBC100FA	17	11	55.5	16	115	75	186	150	7	14.5	89

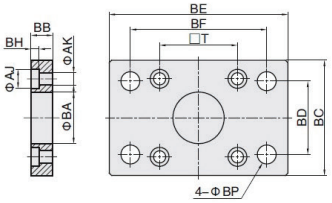

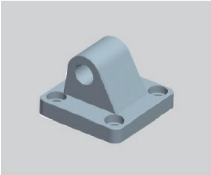

Model\Sign	S	T	DC	DD	DE	DJ	DQ
FJ–VBC32CA	47	32.5	22	9	10	13	25.8
FJ–VBC40CA	53	38	25	12	12	16	27.8
FJ–VBC50CA	65	46.5	27	12	12	17	31.8
FJ–VBC63CA	75	56.5	32	15	16	22	39.7
FJ–VBC80CA	95	72	36	15	16	22	49.7
FJ–VBC100CA	115	89	41	20	20	27	59.7

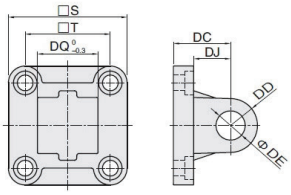

Model\Sign	CC	CD	CE	CJ	CP	CT	S	T
FJ–VBC32CB	22	9	10	13	26	45	47	32.5
FJ–VBC40CB	25	12	12	16	28	52	53	38
FJ–VBC50CB	27	12	12	17	32	60	65	46.5
FJ–VBC63CB	32	15	16	22	40	70	75	56.5
FJ–VBC80CB	36	15	16	22	50	90	95	72
FJ–VBC100CB	41	20	20	27	60	110	115	89

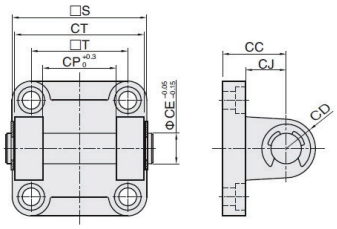

Model\Sign	S	T	DC	DD	DE	DF	DJ	DQ	DM	DN
FJ–VBC32CR	51	38	32	10	10	21	8	25.8	31	18
FJ–VBC40CR	54	41	36	11	12	24	10	27.8	35	22
FJ–VBC50CR	65	50	45	13	12	33	12	31.8	45	30
FJ–VBC63CR	67	52	50	15	16	37	12	39.7	50	35
FJ–VBC80CR	86	66	63	15	16	47	14	49.7	60	40
FJ–VBC100CR	96	76	71	19	20	55	15	59.7	70	50

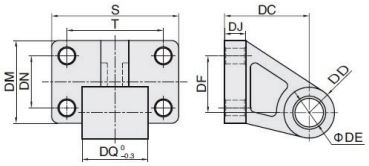

Model\Sign	NA	NB	NC	ND	NH	NM	NP	NQ
FJ–M10X1.25YJ	18	20	10	40	M10X1.25	10	20	52
FJ–M12X1.25YJ	20	24	12	48	M12X1.25	12	24	62
FJ–M16X1.5YJ	26	32	16	64	M16X1.5	16	32	83
FJ–M20X1.5YJ	34	40	20	80	M20X1.5	20	40	105

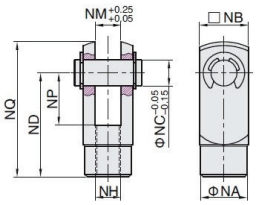

Model\Sign	NA	NC	ND	NE	NF	NG	NH	NM
FJ–M10X1.25 IJ	20	10	40	52	15	20	M10X1.25	10
FJ–M12X1.25 IJ	24	12	48	67	24	20	M12X1.25	12
FJ–M16X1.5 IJ	32	16	64	89	32	23	M16X1.5	16
FJ–M20X1.5 IJ	40	20	80	112	40	30	M20X1.5	20

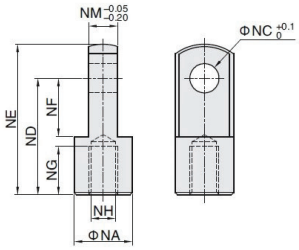

Model\Sign	ND	MB	MC	MD	ME	MF	MG	MH	MI
FJ-M10X1.25FD	58	22	6	28	8	12	M10X1.25	10	M10X1.25
FJ-M12X1.25FD	58	22	7	29	7	12	M12X1.25	12	M12X1.25
FJ-M16X1.5FD	90	27	8	51	12	14	M16X1.5	15	M16X1.5
FJ-M20X1.5FD	102	29	10	59	14	18	M20X1.5	22	M20X1.5

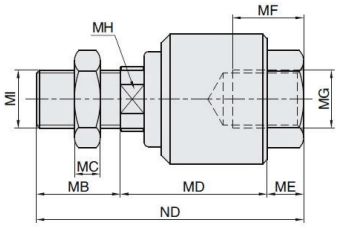

Model\Sign	A	B	C	D	E	G	H	I	J	K	M
FJ-M10X1.25BJ	57.5	44	15.5	28	10	8	M10X1.25	19	25	17	10.5
FJ-M12X1.25BJ	66.5	51.5	17	32	12	9.5	M12X1.25	22	25	19	12
FJ-M16X1.5BJ	85	65	25	40	16	11	M16X1.5	27	35	24	15
FJ-M20X1.5BJ	102	77	30	50	20	12.5	M20X1.5	34	40	30	18

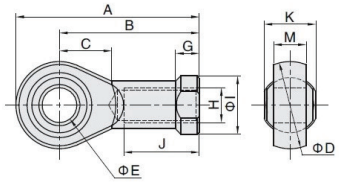

NCM STAINLESS STEEL MINI CYLINDERS

- MAX WORKING PRESSURE: 145 PSI
- INTERCHANGEABLE WITH MAJOR BRANDS
- INTEGRATED RUBBER CUSHIONS
- INTEGRATED MAGNET ON PISTON

NCM25X0500-S

HOW TO ORDER

Series No — NCM (North American Standard)

Cushion Type — Blank: Rubber cushion

Type No — Blank: Basic type; D: Double shaft type

Bore — 16(9/16"), 20(3/4"), 25(1-1/16"), 32(1-1/4"), 40(1-1/2")

X

Stroke — *Stroke length must be indicated as 4 digits. First and second digit:Stroke/Inch. Third and fourth digit:Stroke/Hundredth of an inch. Example) 0525=5.25(5-1/4) inch stroke. Details in stroke chart

—

Magnet No — S: With magnet

—

Tail Type — Blank: Swiveling tail; R: Axial air-in

—

Mounting Type — Blank: No; LB; SDB; YJ

NCM Φ16

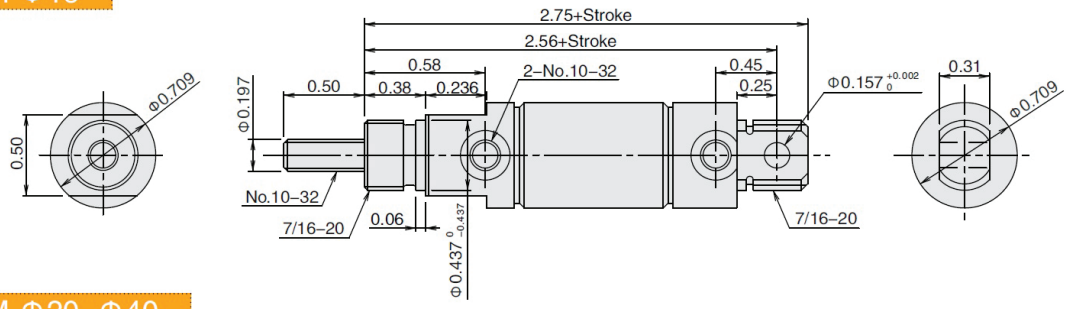

NCM Φ20-Φ40

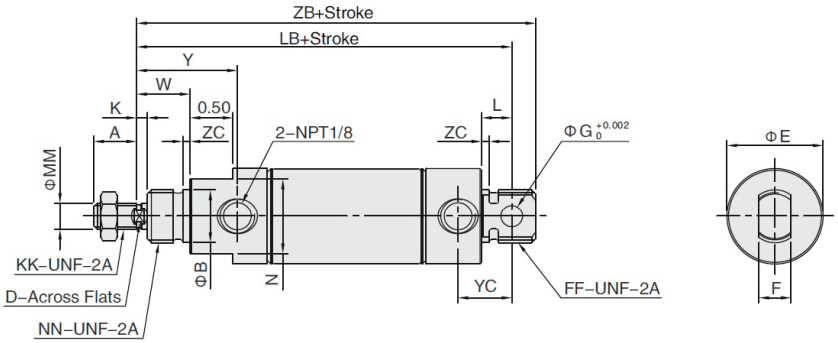

(inch)

Bore	MM	KK	A	B	D	E	F	FF	ΦG	K	L	N	NN	W	Y	YC	LB	ZB	ZC
20(3/4")	0.250	1/4-28	0.50	0.622 $^{0}_{-0.003}$	–	0.87	0.38	5/8-18	0.252	–	0.34	0.75	5/8-18	0.50	0.815	0.654	3.75	4.03	0.08
25(1-1/16")	0.312	5/16-24	0.50	0.622 $^{0}_{-0.003}$	0.25	1.12	0.38	5/8-18	0.252	0.12	0.34	0.88	5/8-18	0.62	0.933	0.654	3.84	4.12	0.08
32(1-1/4")	0.472	7/16-20	0.75	0.748 $^{0}_{-0.003}$	0.38	1.38	0.50	3/4-16	0.252	0.25	0.41	1.06	3/4-16	0.88	1.283	0.811	4.47	4.87	0.08
40(1-1/2")	0.472	7/16-20	0.75	0.748 $^{0}_{-0.003}$	0.38	1.65	0.62	3/4-16	0.378	0.25	0.50	1.25	3/4-16	0.88	1.268	0.886	4.38	4.75	0.08

NCM MOUNTING ACCESSORIES

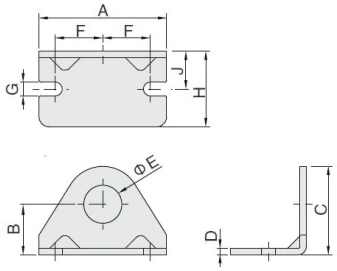

MODEL CODE	BORE	DIMENSIONS (IN)								
		A	B	C	D	E	F	G	H	J
NCM16-LB	16	1.38	0.56	0.83	0.09	0.44	0.50	0.19	0.69	0.38
NCM2025-LB	20 & 25	1.89	0.81	1.36	0.12	0.63	0.75	0.27	0.98	0.56
NCM3240-LB	32 & 40	2.52	1.00	1.75	0.12	0.75	0.94	0.27	1.50	0.75

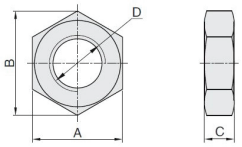

MODEL CODE	THREAD	DIMENSIONS (IN)		
		A	B	C
JM-02	No10-32 UNF	0.31	0.35	0.16
JM-025	1/4-28 UNF	0.39	0.44	0.16
JM-03	5/16-24 UNF	0.51	0.58	0.20
JM-045	7/16-20 UNF	0.67	0.78	0.24
JM-08	5/8-18 UNF	0.95	1.07	0.31
JM-10	3/4-16 UNF	1.06	1.21	0.39

REED SWITCHES

- 2 WIRE TYPE, 1 METER LENGHT
- OPERATING VOLTAGE: 5-240V DC/AC
- NORMALLY OPEN SIGNAL
- RED LED INDICATOR

MODEL CODE	FIT MODELS	BRACKET
HX-21R	NBC	PL
HX-31R	FVBC	IH
HX-03R	NCM	BK-81

REED SWITCH BRACKETS

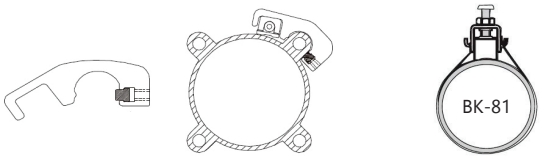

MODEL CODE	FIT MODELS
PL-1	NBC40
PL-2	NBC50
	NBC63
PL-3	NBC80
PL-4	NBC100

MODEL CODE	FIT MODELS
IH-32	FVBC32
IH-40	FVBC40
IH-50	FVBC50
IH-63	FVBC63
IH-80	FVBC80
IH-100	FVBC100

ALSO AVAILABLE

COMPACT CYLINDERS
SQ SERIES

METRIC MINI STAINLESS
STEEL CYLINDERS
IAC SERIES

REPAIRABLE CYLINDER
EG SERIES

GUIDED CYLINDER
SG SERIES

ROTARY CYLINDER
EMQ SERIES

AIR GRIPPER
SHZ SERIES

LEVER VALVES

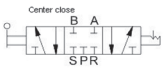

MODEL CODE	DESCRIPTION	PORT SIZE
H322-08-T	3/2 DETENT	1/4 NPT
H323-10-T		3/8 NPT
H522-08-T	5/2 DETENT	1/4 NPT
H522-08S-T	5/2 SPING RETURN	
H523-10-T	5/2 DETENT	3/8 NPT
H524-15T		1/2 NPT

MODEL CODE	DESCRIPTION	PORT SIZE
H532C-08-T	5/3 DETENT, CLOSED CENTER	1/4 NPT
H532C-08S-T	5/3 SPRING RETURN, CLOSED CENTER	
H532E-08-T	5/3 DETENT, EXHAUST CENTER	1/4 NPT
H532E-08S-T	5/3 SPRING RETURN, EXHAUST CENTER	
H533C-10-T	5/3 DETENT, CLOSE CENTER	3/8 NPT
H533C-10S-T	5/3 SPRING RETURN, CLOSE CENTER	

BUTTON VALVES


M32-06S1B-T


MV32-06S2-T


MV32-06S3R-T


MJ32-06S5R-T


MJ32-06S4G-T


M52-08S6R-T

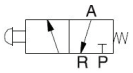

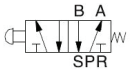

MODEL CODE	DESCRIPTION	PORT SIZE
M32-06S1B-T	3/2 , TWIST SELECTOR, BLACK	1/8 NPT
M52-08S1B-T	5/2 , TWIST SELECTOR, BLACK	1/4 NPT
MV32-06S2-T	3/2, SPRING RETURN, ROLLER TYPE	1/8 NPT
MJ32-08S2-T		1/4 NPT
M52-08S2-T	5/2, SPRING RETURN, ROLLER TYPE	1/4 NPT
MV32-06S3R-T	3/2, PUSH BUTTON, RED, EMERGENCY STOP, RESET	1/8 NPT
MJ32-08S3R-T		1/4 NPT
M32-06S3R-T		1/8 NPT
M32-08S3R-T		1/4 NPT

MODEL CODE	DESCRIPTION	PORT SIZE
MV32-06S4G-T	3/2, SPRING RETURN, PUSH BUTTON, GREEN	1/8 NPT
MJ32-08S4G-T		1/4 NPT
M32-08S4G-T		1/4 NPT
MV32-06S5R-T	3/2, SPRING RETURN PUSH BUTTON, FLUSH, RED	1/8 NPT
MJ32-08S5R-T		1/4 NPT
MV32-06S6R-T	3/2 SPRING RETURN, PUSH BUTTON, RED MUSHROOM	1/8 NPT
MJ32-08S6R-T		1/4 NPT
M52-08S6R-T	5/2 SPRING RETURN, PUSH BUTTON, RED MUSHROOM	1/4 NPT

FOOT PEDALS

MODEL CODE	DESCRIPTION	PORT SIZE
F322-08-T	3/2, SPRING RETURN	1/4 NPT
F422-08-T	4/2, SPRING RETURN	
F522-08-T	5/2, SPRING RETURN	
F522-08L-T	5/2, WITH LOCK 1/2	
F522C-08-T	5/2, WITH GUARD	

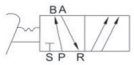

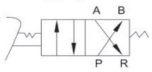

ROTARY VALVES

MODEL CODE	DESCRIPTION	PORT SIZE
R432-08-T	4/3 DETENT	1/4 NPT
R432-10-T		3/8 NPT

HAND PULL VALVES

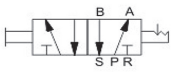

MODEL CODE	DESCRIPTION	PORT SIZE
L523-10-T	5/2, DETENT	3/8 NPT
L524-15-T		1/2 NPT

FLOW CONTROL VALVES

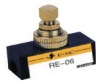
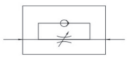

MODEL CODE	PORT SIZE
RE-06-T	1/8 NPT
RE-08-T	1/4 NPT
RE-10-T	3/8 NPT
RE-15-T	1/2 NPT

SLIDE VALVES


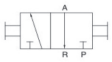

MODEL CODE	PORT SIZE
YHS-08FF-T	1/4 NPT
YHS-10FF-T	3/8 NPT
YHS-15FF-T	1/2 NPT
YHS-20FF-T	3/4 NPT
YHS-25FF-T	1" NPT

QUICK EXHAUST VALVES


MODEL CODE	PORT SIZE
KKP-06-T	1/8 NPT
KKP-08-T	1/4 NPT
KKP-10-T	3/8 NPT
KKP-15-T	1/2 NPT

3 WAY SOLENOID VALVES

HOW TO ORDER

Standard Solenoid Valve

Series No. — RV
Ports — 3: 3 ports
Positions — 2: 2 positions
Valve Body ID Code — 1: 1Series; 2: 2Series; 3: 3Series; 4: 4Series
Controls — 1: Single control; 2: Double control
Original Status — Blank: Normal close; H: Normal open
— Port Size — M5: M5; 06: 1/8"; 08: 1/4"; 10: 3/8"; 15: 1/2"
Reset Typt — Blank: Spring (Only 4 series single control); Q:Air (1,2,3 series single control)
ID Code — Blank: Standard type; A: Amisco coil
Voltage — E1: AC110V; E2: AC220V; E3: AC380V; E4: DC24V; E5: DC12V; E6: AC36V; E7: AC24V; E8: DC110V; E9: DC48V; E10: DC36V
Connection Mode — Blank: DIN connector; F:Flying leads; K: Waterproof DIN connector (Only for 2,3,4 series)
Cover Color — Blank: Brown translucent; J: Colorless and translucent; B: Black (Only Waterproof DIN connector)
— Valve Color — Blank: Internal pilot; WB: External pilot
— Thread Type — Blank: G; P: PT; T: NPT

5 WAY SOLENOID VALVES

HOW TO ORDER

Standard Solenoid Valve

Series No. — RV
Ports — 5:5 ports
Positions — 2:2 positions; 3:3 positions
Valve Body Size — 1: 1Series; 2: 2Series; 3: 3Series; 4: 4Series
Controls — 1: Single control; 2:Double control
Original Status — C: Center close; P: Center pressure; E: Center exhaust (Only for 5/3 way)
— Port Size — M5: M5; 06: 1/8"; 08: 1/4"; 10: 3/8"; 15: 1/2"
Reset Form — Blank: Spring; Q: Air (Only single control)
ID Code — Blank: Standard type; A: Amisco coil
Voltage — E1: AC110V; E2: AC220V; E3: AC380V; E4: DC24V; E5: DC12V; E6: AC36V; E7: AC24V; E8: DC110V; E9: DC48V; E10: DC36V
Connection Mode — Blank: DIN connector; F: Flying leads; K: Waterproof DIN connector (Only 2、3、4 series is optional)
Cover Color — Blank: Brown translucent; J: Colorless and translucent
Acting Type — Blank: Internal pilot; WB: External pilot
— Thread Type — Blank: G; P: PT; T: NPT

MANIFOLD MOUNT SOLENOID VALVES

HOW TO ORDER

SR Valve Group:

Series No. — S: Common type; SN: Low power type
Valve Body Size — 1: 1 series; 2: 2 series
ID code — R: RV series valve
Valve Numbers — 3:3valves; 4:4valves; 5:5valves; 6:6valves; 7:7valves; 8:8valves; 9:9valves; 10:10valves; 11:11valves; 12:12valves; 13:13valves; 14:14valves
Controls — S: Single coil
— Port Size — M5: M5; 06: 1/8"; 08: 1/4"
Voltage — E4:DC24V; E5:DC12V (Only DC24V for low power type)
Coil Type — Blank: Plug–in type
— Thread Type — Blank: G; P: PT; T: NPT
Mounting Type — Blank: No accessory; D: Din guide rail clip with 1 meter din guide rail; DO: Din guide rail clip without din guide rail (Din guide rail packed separatly)

FILTERS

- MAX WORKING PRESSURE: 145 PSI
- FILTRATION: 5 MICRONS
- MANUAL DRAIN (AUTO-DRAIN AVAILABLE)

MODEL CODE	PORT SIZE	MAX L/MIN
EIF2000-015M-T	1/8 NPT	1000
EIF2000-025M-T	1/4 NPT	1100
EIF3000-035M-T	3/8 NPT	2148
EIF4000-045M-T	1/2 NPT	5430
EIF5000-065M-T	3/4 NPT	8200
EIF5000-105M-T	1 NPT	8200

LUBRICATORS

- MAX WORKING PRESSURE: 145 PSI
- FILTRATION: 5 MICRONS

MODEL CODE	PORT SIZE	MAX L/MIN
EIL2000-01-T	1/8 NPT	1300
EIL2000-02-T	1/4 NPT	1345
EIL3000-03-T	3/8 NPT	2375
EIL4000-04-T	1/2 NPT	5532
EIL5000-06-T	3/4 NPT	7700
EIL5000-10-T	1 NPT	8000

REGULATORS

- MAX WORKING PRESSURE: 145 PSI
- ADJUSTMENT RANGE: 7-123 PSI
- PRESSURE GAUGE INCLUDED

MODEL CODE	PORT SIZE	MAX L/MIN
EIR2000-013-T	1/8 NPT	1178
EIR2000-023-T	1/4 NPT	1200
EIR3000-033-T	3/8 NPT	2212
EIR4000-043-T	1/2 NPT	5312
EIR5000-063-T	3/4 NPT	6400
EIR5000-103-T	1 NPT	6600

FILTER + REGULATORS

- MAX WORKING PRESSURE: 145 PSI
- ADJUSTMENT RANGE: 7-123 PSI
- PRESSURE GAUGE INCLUDED
- FILTRATION: 5 MICRONS
- MANUAL DRAIN (AUTO-DRAIN AVAILABLE)

MODEL CODE	PORT SIZE	MAX L/MIN
EIW2000-0135M-T	1/8 NPT	1078
EIW2000-0235M-T	1/4 NPT	1165
EIW3000-0335M-T	3/8 NPT	2177
EIW4000-0435M-T	1/2 NPT	5211
EIW5000-0635M-T	3/4 NPT	6200
EIW5000-1035M-T	1 NPT	6400

FRL'S

- MAX WORKING PRESSURE: 145 PSI
- ADJUSTMENT RANGE: 7-123 PSI
- PRESSURE GAUGE INCLUDED
- FILTRATION: 5 MICRONS
- MANUAL DRAIN (AUTO-DRAIN AVAILABLE)

MODEL CODE	PORT SIZE	MAX L/MIN
EIC2000-0135M-T	1/8 NPT	1000
EIC2000-0235M-T	1/4 NPT	1100
EIC3000-0335M-T	3/8 NPT	2105
EIC4000-0435M-T	1/2 NPT	5200
EIC5000-0635M-T	3/4 NPT	6200
EIC5000-1035M-T	1 NPT	6500

L TYPE BRACKETS

MODEL CODE	MODELS
Y20L	2000
Y30L	3000
Y40L	4000
Y50L	5000

T TYPE BRACKETS

MODEL CODE	MODELS
Y20T	2000
Y30T	3000
Y40T	4000
Y50T	5000

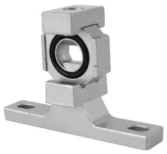

ONE TOUCH FITTINGS

- ONE TOUCH PUSH-TO-CONNECT CONFIGURATION ALLOWS AN INSTANT TUBING CONNECTION.
- SMOOTH EDGE RELEASE SLEEVE DESIGN FACILITATES A QUICK TUBING DISCONNECTION.
- PRE-APPLIED SEALANT ON ALL EXTERNAL THREADS.

HOW TO ORDER

Series No.	Tube outside diameter		Thread size	Thread type
ZPC	04: 4 mm	5/32: 5/32”	M5: M5	P: PT
ZPCF	06: 6 mm	3/16: 3/16”	M6: M6	G: G
ZPOC	08: 8 mm	1/4: 1/4”	01: 1/8”	T: NPT
...	10: 10 mm	5/16: 5/16”	02: 1/4”	
	12: 12 mm	3/8: 3/8”	03: 3/8”	
	16: 16 mm	1/2: 1/2”	04: 1/2”	

ZPC

ZPCF

ZPOC

ZPMF

ZPL

ZPLF

ZPLL

ZPB

ZPBF

ZPD

ZPWT

ZPH

ZPHF

ZPGJ

ZPU

ZPV

ZPE

ZPY

ZPM

ZPZA

ZPP

ZPIJ

ZPLJ

ZPWJ

ZPG

ZPW

ZPEW

ZPKG

ZPIG

ZPKD

ZPK

ZPEG

ZPKB

ZSA

ZSC

POLYURETHANE TUBING

* MAX WORKING PRESSURE: UP TO 145 PSI

HOW TO ORDER

Series No.	O.D.			X	I.D.	Length	Color code
PU: PU Tube	040: 4 mm	5/32	5/32"		025: 2.5 mm	20M: 20M/Roll	BU: Blue
	060: 6 mm	3/16	3/16"		040: 4 mm	30M: 30M/Roll	B: Black
	080: 8 mm	1/4:	1/4"		050: 5 mm	100M: 100M/Roll	C: Transparent
	100: 10 mm	3/8:	3/8"		060: 6 mm	200M: 200M/Roll	O: Orange
	120: 12 mm	1/2:	1/2"		065: 6.5mm	(Only ø4x2.5 and	R: Red
	160: 16 mm				080: 8 mm	ø6x4 are 200m/Roll)	W: White
					100: 10 mm		G: Green
					120: 12 mm		Y: Yellow

AVAILABLE COLORS

Metric	BU	B	Clear	O	R	W	G	Y
4mm	√	√	√	√	√	√	√	√
6mm	√	√						
8mm	√	√						
10mm	√	√						
12mm	√	√						
16mm	√	√						

Imp.	BU	B	Clear	O	R	W	G	Y
5/32"	√	√	√		√	√	√	√
3/16"	√	√						
1/4"	√	√	√	√	√	√	√	√
5/16"	√	√						
3/8"	√	√	√					
1/2"	√	√						

TUBE CUTTER

MODEL CODE: ECP-01

MUFFLERS

MODEL CODE	PORT SIZE
V-06T	1/8 NPT
V-08T	1/4 NPT
V-10T	3/8 NPT
V-15T	1/2 NPT
V-20T	3/4 NPT
V-SAE6	SAE-06
V-SAE8	SAE-08

MODEL CODE	PORT SIZE
A-06T	1/8 NPT
A-08T	1/4 NPT
A-10T	3/8 NPT
A-15T	1/2 NPT
A-20T	3/4 NPT
A-25T	1 NPT

MODEL CODE	PORT SIZE
SB-06T	1/8 NPT
SB-08T	1/4 NPT
SB-10T	3/8 NPT
SB-15T	1/2 NPT
SB-20T	3/4 NPT

ENGINEERED SOLUTION

Customized service for any project size

Hydrolico's sales team and outstanding customer service department work closely with technical support to help you select the best product solutions for your needs. Our reliable and durable components and systems will meet all your technical specifications, ensuring your complete satisfaction.

Your one-stop shop for hydraulics, pneumatics and automation.

- High-value fluid power systems
- High hand simulation tools
- Consultation services
- Support team : troubleshooting, field installation, startup, data logging
- Benchmarking
- Turnkey solutions
- Customized training

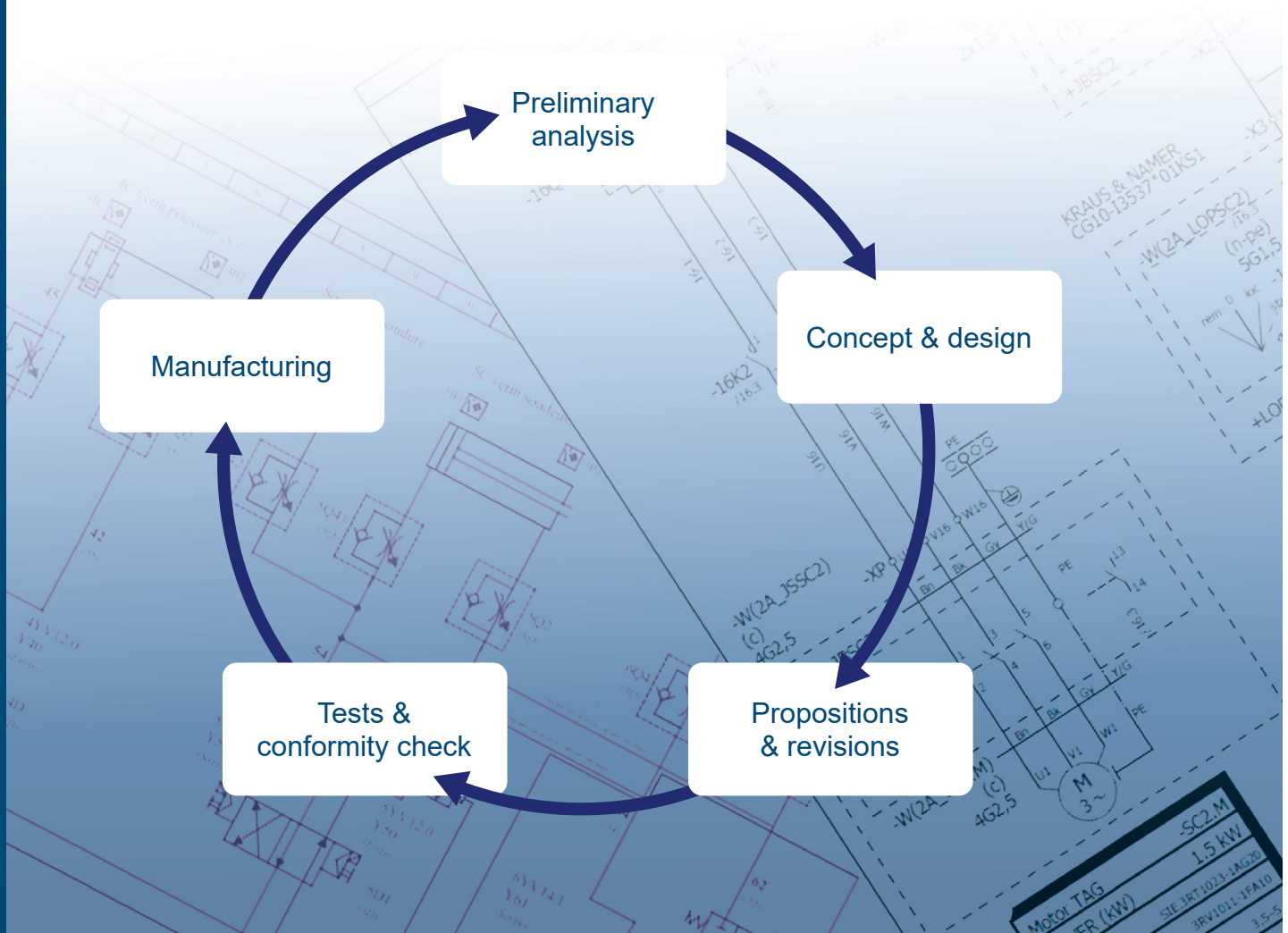

HYDRAULIC POWER UNITS (HPU)

- DESIGN AND MANUFACTURING BASED ON YOUR SPECS
- HYDRAULIC CABINETS
- ELECTRO-HYDRAULIC AND PROPORTIONAL SYSTEMS
- TURNKEY SYSTEMS
- MODIFICATION, REPAIR, RECONDITIONING, STARTER AND TROUBLESHOOTING SERVICES
- ANALYSIS AND SIMULATION WITH AUTOMATION STUDIO™ SOFTWARE

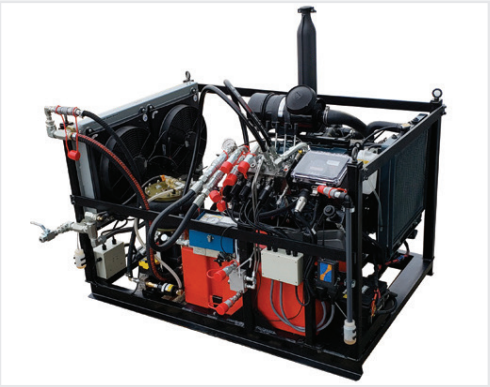

MANIFOLDS

- DESIGN AND MANUFACTURING IN ACCORDANCE WITH NFPA STANDARDS OR BASED ON YOUR SPECS
- ALUMINUM, STEEL AND STAINLESS STEEL
- SINGLE OR FOR HIGH-VOLUME PRODUCTION UNIT

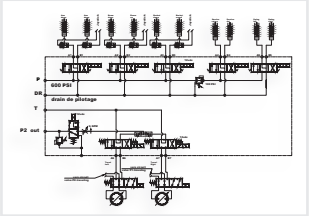

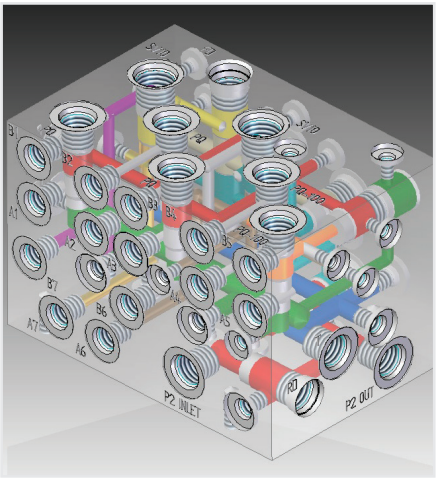

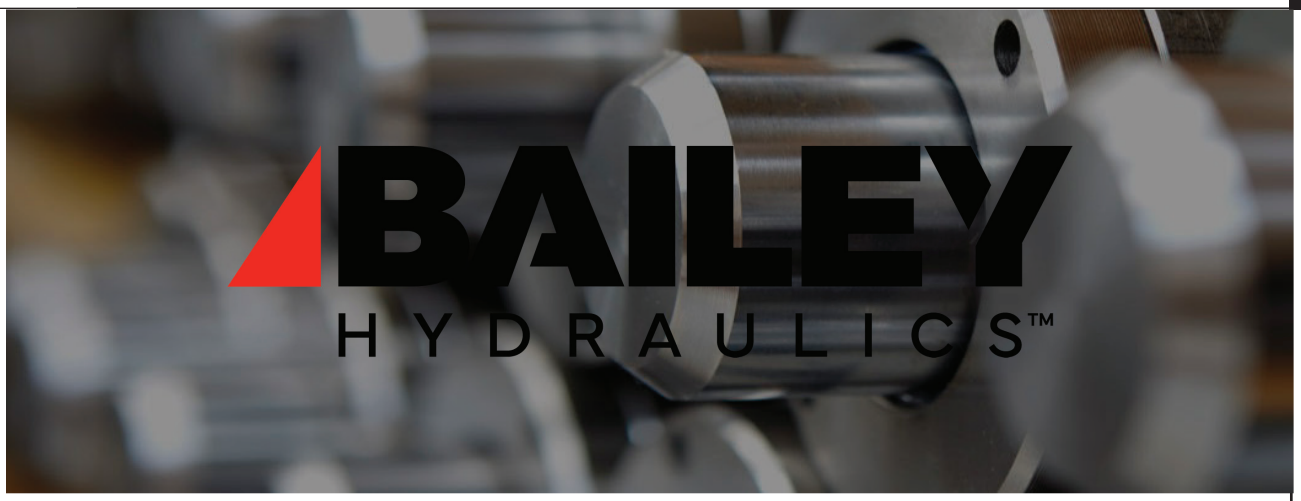

Terms & Conditions

1 Presentation

Bailey International, LLC, Hydrolico International Inc, and their respective parent companies, subsidiaries, and affiliates (collectively, “Hydrolico,” “we,” or “our”) have created these Terms and Conditions (“Terms”) governing our provision of products and services. Our Privacy Policy and Online Services Terms of Use are available here and are incorporated into these Terms by reference, as if they were completely restated here.

BY ORDERING PRODUCTS (DEFINED BELOW) FROM HYDROLICO, THE CUSTOMER (DEFINED BELOW) AGREES TO THESE TERMS, WHICH, TOGETHER WITH ANY PURCHASE ORDER (DEFINED BELOW) AND ALL PRODUCT SPECIFICATIONS (DEFINED BELOW) PROVIDED OR SIGNED BY THE CUSTOMER AND ACCEPTED BY HYDROLICO, COLLECTIVELY FORM A BINDING AND ENFORCEABLE AGREEMENT BETWEEN HYDROLICO AND THE CUSTOMER.

These Terms modify and replace the existing Hydrolico Terms and Conditions. These Terms come into effect on May 1, 2023.

2 Definitions

Unless the context requires otherwise, the following words or phrases, when capitalized, have the meaning ascribed to them below.

2.1 Purchase Order

“Purchase Order” means all documents titled “Purchase Order” and any other order request confirmation, including signed drawings, online orders, fax orders, email orders, letters, and telephone confirmations.

2.2 Customer

“Customer” means the customer named on any purchase order or supply agreement for any product, and includes individuals, as well as any business or other person that the individual represents.

2.3 Products

“Products” or “Product” means all hydraulic components manufactured or distributed by Hydrolico and all other goods purchased by Bailey for resale, as well as all services provided by Hydrolico in connection with any Products.

2.4 Product Specifications

“Product Specifications” means all descriptions, documents, images, drawings, manuals, instructions, and warnings that in any way describe or specify the design, function, appearance, materials, use, operation, maintenance, disposal, disassembly, or demolition of any Product supplied by Bailey.

3 No Variation of the Terms

The Product supply arrangement between Hydrolico and the Customer is subject to and governed by these Terms. Any variation of these and any additional or different terms or conditions on any document submitted by the Customer are hereby expressly rejected. All orders are subject to acceptance by Hydrolico and all accepted orders are governed by these Terms. Any representation, current transaction, or promise or condition or commercial use not incorporated herein is not binding on Hydrolico. In the event of a conflict between the Terms and any Purchase Order, these Terms will prevail.

4 Ordering Procedures

The Customer places orders with Hydrolico using a Purchase Order. The Purchase Order must include the order number, the products to be supplied, the prices, the quantities, the required date, the place of delivery and the Customer's contact information.

By placing an order for Products with Hydrolico, the Customer states and warrants that he has the authority to enter into a legally binding agreement on behalf of any entity or other person that he represents.

Upon receipt of the Purchase Order, Hydrolico will confirm in writing its acceptance or refusal of the Purchase Order.

The Purchase Order will include the terms and conditions set out in these Terms without the need to expressly refer to them.

Within five (5) business days of its acceptance, Hydrolico may refuse a Purchase Order if additional information is required or if Hydrolico is unable to provide the products ordered within the timeframe set out in the Purchase Order. If applicable, Hydrolico will notify the Customer in writing of its refusal of the Purchase Order.

5 Product pricing

All Products will be invoiced in accordance with Hydrolico's price schedule in effect at the time of the order.

The prices indicated in the price schedule do not include taxes. All sales, use, excise, property, business and other applicable taxes are the responsibility of the Customer and payable by the Customer to Hydrolico. If the Customer requests an exemption from any taxes, the Customer must provide written proof of the exemption and indemnify and hold Hydrolico harmless with respect to such taxes, interest, and penalties. Products may also be subject to import taxes, customs duties, and/or fees imposed by government regulations. These costs are the responsibility of the Customer and will be additional costs unless otherwise specified.

All prices on orders that have not yet been processed and accepted are subject to change without notice. Hydrolico reserves the right to correct any printing errors on the website or catalogue. Mixing of Product quantities to obtain volume discounts is only allowed on certain Products and will be done so at Hydrolico’s sole discretion.

Hydrolico reserves the right to charge a non-refundable deposit for custom-made Products and/or Products that are shipped quickly. These deposits must be paid before Hydrolico begins production. If the Customer attempts to cancel or terminate an order for a custom-made Product, Hydrolico will keep the deposit as damages and not as a penalty. Notwithstanding the above, the Customer may not cancel or terminate an order for a Custom Product if the production of the Product has begun.

6 Payments

Unless otherwise agreed in writing by Hydrolico at the time of order processing, payment for all Products must be made prior to shipment. Hydrolico offers certain credit facilities through its credit department, which are subject to acceptance by Hydrolico and the credit terms are at its sole discretion.

Hydrolico International Inc.
Accounts Receivable
55 rue Théodore-Viau, Terrebonne, QC J6Y 0J8, Canada.

Hydrolico may suspend or delay the manufacture and/or shipping of subsequent Products or cancel or terminate pending orders due to late payments by the Customer. The Customer will reimburse Hydrolico for all damages incurred by Hydrolico as a result of such delay, cancellation or termination. The balance of the unpaid bills will increase at an interest rate of one percent (1%) per month (12% per year).

7 Shipping

All products will be delivered FOB to the Hydrolico shipping point by Incoterm. Hydrolico will determine the shipping and delivery method unless a prior written agreement between Hydrolico and the Customer is in place. All shipping and delivery dates provided by Hydrolico are approximate. Hydrolico shall not be held liable for delays in the delivery of any product for any reason or for the costs associated with this. Hydrolico shall not be responsible for handling fees or other transportation costs or incidental expenses.

The Customer bears all the risks of loss of the Products, upon delivery by Hydrolico to the carrier or upon collection by the Customer at the Hydrolico warehouse. The Customer will be responsible for filing and pursuing claims with carriers for loss or damage to Products in transit. Hydrolico makes no representation with respect to the authorizations that may be required to ship Products and assumes no responsibility in this regard. The Customer undertakes to carry out the checks and to obtain all the authorizations that may be required for transport.

Hydrolico may deliver the Products in several batches and bill each batch separately. Any request by the Customer to cancel part of an order prior to delivery must be made in writing. The Customer will pay the full cost of completed custom orders and stored custom components. Items held at Hydrolico at the request of the Customer or as a result of a failure by the Customer will incur storage fees of five percent (5%) per month of the total amount of the Purchase Order. Any order shipped by Hydrolico and refused by the Customer will be treated as a Product return. Special orders and/or Custom Products, including but not limited to cut rods and tubes, cannot be cancelled. Hydrolico may, without prejudice to any other right or remedy, cancel any order from the Customer or postpone shipping in the following events: the Customer does not pay the amount due to Hydrolico by the due date;

(i) the financial situation of the Customer is unsatisfactory to Hydrolico, at our sole discretion;

(ii) the Customer does not comply with any applicable law, rule, or regulation; or

(iii) the Customer does not comply with these Terms, the Privacy Policy, or any other agreement with Hydrolico.

8 Product Returns

Product returns are authorized at Hydrolico's sole discretion. The Customer must not return products without the prior written authorization of Hydrolico and without marking such return with a Hydrolico Return Merchandise Authorization (“RMA”) number provided by Hydrolico for such return. RMAs can only be obtained from Hydrolico by calling (450-628-6644) or 877-628-6644, or by making a request via email to info@hydrolico.com. The Customer shall assume all risks associated with the return of any Product. Returned Products must be received by Hydrolico within forty-five (45) days of receipt of the Product by the Customer, at the location designated by Hydrolico. Returned Products must not have been used, and must be free from any damage, be safely packed and marked with the name of the Customer and the RMA issued by Hydrolico.

Credit for any returned Product, if such credit is due, will be issued based on the lesser of the original invoice price or the current selling price. The issuance of a credit is contingent upon Hydrolico's satisfaction upon receipt of the Product and compliance with the return procedures provided in the previous paragraph. Special orders and Custom Products, including but not limited to cut rods and tubes, cannot be returned. Hydrolico may charge the Customer a restocking fee, which shall not exceed twenty percent (20%) of the amount initially invoiced to the Customer for the returned Product, in addition to all shipping costs (including, for greater certainty but not limited to, any applicable taxes or customs duties). This invoice is due within fifteen (15) days of receipt. The payment terms of article 6 apply with the necessary adjustments.

9 Custom Products

Hydrolico may choose to prepare one (1) or more drawings for the design of Customized Products on behalf of the Customer based on the Customer's design and instructions. Hydrolico will provide a copy of these drawings to the Customer as a submission for the manufacturing of a Custom Product. To accept Hydrolico's submission, the Customer must sign and return the drawings to Hydrolico by email or by any other method acceptable to Hydrolico. The Customer's signature on these drawings will constitute a verification by the Customer that Hydrolico's design of the Custom Product meets the Customer's requirements. In the event that the Customer provides one (1) or more of its own drawings for Hydrolico to manufacture a Custom Product, Hydrolico may make necessary changes, consistent with Hydrolico's design and manufacturing capabilities, and subsequently provide the Customer with drawings approved by Hydrolico for Customer's acceptance and signature. Drawings signed by the Customer in accordance with the provisions of this section ("Signed Drawings") will form part of these Terms with respect to the applicable Products, regardless of the original supplier of these drawings or if changes are made to them by Hydrolico or the Customer.

Once Hydrolico receives the signed drawings, Hydrolico will not modify any Key Attributes (defined below) of a custom Product design without obtaining the Customer's consent. The Customer's signature on the updated drawing(s) shall constitute the Customer's consent to these modifications. Once Hydrolico receives the signed drawings, the Customer must request any changes to any Key Attributes in the Custom Product design, by providing Hydrolico, or by requesting Hydrolico to provide updated drawings that reflect these proposed or requested changes to the design for the Customer's signature. Hydrolico's acceptance of any updated design will be communicated to the Customer in writing. As used here, "Key Attribute" includes bore diameter, stroke, retracted length, and mounting type. Hydrolico may choose, but is not required, to allow the Customer to designate in writing one (1) or more attributes of the general appearance, design, dimensions, or other attributes of a Custom Product as a Key Attribute for purposes of these Terms.

Hydrolico reserves the right to authorize or make changes to any attribute of a Custom Product, other than a Key Attribute, as is reasonably necessary for Hydrolico to manufacture that Product in accordance with Hydrolico's design, material procurement, and manufacturing capabilities. Notwithstanding the foregoing, Hydrolico reserves the right to authorize or make changes to any Custom Product for which the Customer signed drawings prior to January 16, 2015, including any Key Attribute and its related signed drawings, without obtaining the consent of the Customer.

The Customer is fully liable for the design, quality, and functionality or lack thereof of any Custom Product, including, but not limited to, any cylinder, hydraulic power unit, or other Products. Hydrolico assumes no liability for the operation or use by the Customer or the end user of such Custom Product. All drawings, special tools, dies, models, templates, and assemblies created, purchased or supplied by Hydrolico will be and remain the exclusive property of Hydrolico and the Customer will have no rights over them.

The Customer who provides drawings to Hydrolico states and guarantees that he has the Intellectual Property Rights (as defined in article 12) to these designs or authorization from the owner of these Intellectual Property Rights to have the Custom Products manufactured by Hydrolico.

10 Limited Warranty; Warranty Disclaimers

Unless otherwise specified, Hydrolico warrants Products manufactured by Hydrolico for a period of one (1) year from the date of purchase against failures, only to the extent that they are caused by faulty materials or faulty workmanship, provided that:

a) his failure occurs during the use of the Product in accordance with the Product specifications provided by Hydrolico; and

b) there was no disassembly, damage during shipping, abuse, misuse, misapplication, maintenance, modification, or improper installation or maintenance or repair of the Product.

Warranty coverage is conditional upon the Customer:

a) notifying Hydrolico in writing of the warranty claim, within fifteen (15) days following the alleged malfunction;

b) obtaining an RMA and a product return location from Hydrolico, unless Hydrolico chooses not to provide one;

c) complying with all applicable Hydrolico procedures and instructions regarding the return of the Product;

d) providing Hydrolico with a detailed written report on the circumstances of the alleged failure of the Product, including photos of the Product; and

e) giving Hydrolico a reasonable amount of time to inspect the Product and investigate the claim.

Hydrolico's sole obligation under this limited warranty will be as follows: If, following the inspection conducted by Hydrolico of the Products returned in accordance with the above, the warranty described above applies, Hydrolico may, at its sole discretion, either refund the price paid by the Customer for the Product, or replace the Product or part and pay the shipping costs incurred as a consequence at the lowest rate for shipping from the Hydrolico Customer's site to a Hydrolico product return site. If following inspection by Hydrolico of the returned Products, the warranty described above does not apply, inspection fees, plus shipping and handling, will be invoiced to the Customer by Hydrolico.
Hydrolico does not guarantee or provide technical advice as to the suitability of a Product for the Customer's application or use. The Customer is solely responsible for determining whether a Product meets its needs and for complying with all applicable laws, ordinances, regulations, rules, and standards relating to the installation, maintenance, use, dismantling, demolition, and disposal of each Product.

THE FOREGOING CONSTITUTES THE EXCLUSIVE REMEDY OF THE CUSTOMER AND THE EXCLUSIVE LIABILITY OF HYDROLICO. THIS GUARANTEE CANNOT BE ASSIGNED OR TRANSFERRED BY THE CUSTOMER. THIS WARRANTY SUPERSEDES ANY OTHER WARRANTY, ORAL OR WRITTEN, EXPRESS OR IMPLIED. ANY WARRANTY OF MERCHANTABILITY, CONSISTENT WITH A PARTICULAR USE. ANY OTHER WARRANTIES NOT SPECIFICALLY PROVIDED HEREIN ARE SPECIFICALLY EXCLUDED. THE SALE OF HYDROLICO PRODUCTS UNDER ANY OTHER WARRANTY IS NOT AUTHORIZED.
ANY PRODUCT SOLD BY HYDROLICO THAT IS NOT MANUFACTURED BY HYDROLICO IS SOLD ON AN “AS IS” AND “WITH ALL FAULTS” BASIS. WITH RESPECT TO SUCH A PRODUCT, HYDROLICO EXCLUDES AND DISCLAIMS ALL WARRANTIES, EXPRESS OR IMPLIED, WRITTEN OR ORAL, AS WELL AS ANY WARRANTY OF COMPLIANCE OR FITNESS FOR A PARTICULAR USE.

Many Products sold by Hydrolico are manufactured by third parties and are guaranteed by their manufacturers. Any third party warranty for any item in the Hydrolico printed catalogue or website can be obtained from: Hydrolico International Inc., 55, Théodore-Viau, Terrebonne, Québec, Canada J6Y 0J8.

11 Limitation of Liability

IN NO EVENT, REGARDLESS OF THE SOURCE OF HYDROLICO'S LIABILITY, SHALL HYDROLICO BE LIABLE TO THE CUSTOMER OR ANY THIRD PARTY FOR ANY INDIRECT, CONSEQUENTIAL, PUNITIVE, OR EXEMPLARY DAMAGES, INCLUDING, BUT NOT LIMITED TO, ANY LOSS OF PROFITS OR LOSS OF USE, REGARDLESS OF FAULT OR CAUSE, EVEN IF HYDROLICO IS ADVISED IN ADVANCE OF THE POSSIBILITY OF SUCH DAMAGES.

UNDER NO CIRCUMSTANCES WILL HYDROLICO BE LIABLE TO THE CUSTOMER FOR ANY TOTAL AMOUNT EXCEEDING THE PURCHASE PRICE OF THE PRODUCT(S) FOR WHICH A CLAIM IS MADE AS WELL AS DELIVERY COSTS, IF APPLICABLE. THE CUSTOMER WAIVES ANY COMPENSATION AGAINST PAYMENTS DUE ON HIS ORDERS. THE CUSTOMER ALSO WAIVES HIS RIGHT TO THE DEFENCE OF NON-PERFORMANCE. THE PROVISIONS OF THIS SECTION

DISTRIBUTE THE RISKS BETWEEN HYDROLICO AND THE CUSTOMER. HYDROLICO'S PRICES REFLECT THIS DISTRIBUTION OF RISKS AND, WITHOUT THIS DISTRIBUTION AND LIMITATION OF LIABILITY, HYDROLICO WOULD NOT HAVE CONCLUDED ANY AGREEMENT WITH THE CUSTOMER FOR THE SALE OF PRODUCTS. THE CONDITIONS IN THIS SECTION WILL ALSO APPLY TO ANY SUPPLY CONTRACT AND ANY SUPPLY PLAN BETWEEN HYDROLICO AND THE CUSTOMER WITH NECESSARY ADJUSTMENTS.

12 Intellectual Property

Hydrolico's exclusive liability for the violation of patents, trademarks, copyrights, trade dress, trade secrets, or similar rights, and the Customer's exclusive remedy for such infringement will be as follows: Hydrolico shall defend, indemnify and hold harmless the Customer, including retaining legal counsel chosen at Hydrolico’s discretion, with respect to any legal proceedings brought against the Customer by a third party for infringement of patents, trademarks, copyrights, trade dress, and trade secrets (“Intellectual Property Rights”) resulting solely from the sale by Hydrolico of Products designed and manufactured solely by Hydrolico. The Customer must cooperate fully with Hydrolico in the defense and must not take any position unfavourable to Hydrolico's defense against such action. The foregoing commitment does not apply unless Hydrolico has been informed in writing and in detail by the Customer as soon as possible of any infringement claim and has been given the opportunity to consent and defend them. Hydrolico will have the right to resolve any claim in the manner agreed between Hydrolico and the Customer.

Notwithstanding the foregoing, Hydrolico shall have no obligation to def end or indemnify the Customer in the event of infringement claims based on:

(i) information or designs provided or specified in whole or in part by the Customer;

(ii) offences resulting from the amendment;

(iii) a combination or the use of any Product in a system; or (iv) Products that are not manufactured solely by Hydrolico.

Under these Terms, to the extent that any product supplied is manufactured in accordance with the drawings, samples, manufacturing specifications, or other information or content provided by the customer, the customer must indemnify and hold Hydrolico harmless from all damages, costs, and expenses resulting from a claim that said product manufactured by Hydrolico under the direction and design of the Customer, in whole or in part, or the use of it infringes any foreign or national patent right.

The Customer agrees to undertake the defense of any such claim against Hydrolico at its own expense or to reimburse Hydrolico for its defense costs and expenses, including, without limitation, all reasonable extrajudicial fees, costs, and disbursements, incurred as a result of any such claim or claims, in addition to any other obligations of the Customer as set forth herein. Such a lawsuit can only be resolved with the agreement of Hydrolico.

13 Entire Agreement

These Terms, including, without limitation, any Purchase Order and related Product Specifications, if any, represent the entire agreement between the parties with respect to the subject matter hereof and supersede all other prior agreements, understandings, and accords, whether oral or written. No provision of these Terms may be amended, modified, revoked, cancelled, or terminated except in writing and signed by each of the parties hereto.
The Customer may not assign any rights or obligations under these Terms, any Purchase Order, or any Product Specification, in whole or in part, without the prior written consent of Hydrolico.

14 No waiver

If a party fails to exercise any of its rights granted hereunder, this does not constitute a waiver or modification of its rights under these terms and conditions; each party may, within the time prescribed by law, institute legal proceedings to exercise its rights under these terms and any previous failure or delay in doing does not constitute a defense which is enforceable.

15 Divisibility of the Conditions

If, for any reason, any provision of these Terms is deemed invalid, that invalidity will not affect any other provision of these Terms that is not considered invalid, and each such other provision shall remain in full force and effect, to the fullest extent of the law.
If any provision of these Terms is deemed partially invalid, that invalidity will in no way affect the remainder of that provision, and the remainder of that provision, together with all other provisions of these Terms, shall remain in full force and effect to the fullest extent of the law.

16 Force Majeure

Notwithstanding anything else contained herein to the contrary, neither party shall be liable for any failure or delay in performing its obligations (except for payment obligations) under these Terms to the extent that such breach or delay is due to “Force Majeure”, including but not limited to cases of natural disasters, fires, floods, power outages, wars, civil unrest, epidemics, pandemics, sabotage, terrorism, accidents, insurrections, blockades, embargoes, storms, explosions, acts of a public enemy, social conflicts (whether or not the claims of employees are reasonable and/or to the extent that the party is able to satisfy), the failure of public carriers, Internet service providers, or other communication devices, the acts of cybercriminals, the acts of any government agency (civilian or military, foreign or domestic), the failure or delay of third parties or government agencies for which a party obtains or is required to obtain approvals, authorizations, licenses, franchises, or permits; the inability to obtain labor, materials, electricity, equipment, transportation, or other circumstances that are unforeseeable and unavoidable). Such delays will not constitute a breach or failure to perform these Terms or any part of them and the date by which obligations hereunder must be fulfilled will be extended by a period equal to the time lost as a result of these delays. Neither party shall be held liable to the other for claims of liability, damages, or other losses caused by or resulting from Force Majeure events.

17 Sending Notices in Writing

Except as otherwise provided herein, any notice required or authorized to be given in accordance with the provisions of these Terms must be in writing and shall be deemed to have been sent when it is (a) delivered in person or (b) deposited to the Canadian Postal Service, registered or certified, and prepaid, or (c) sent by electronic means (email or otherwise) that allows the sender to demonstrate that the notice was in fact received by the recipient. In each case, this notice must be delivered or addressed to the contact information indicated on the Customer's account for the purposes of placing orders with Hydrolico (in the Customer’s case) or Hydrolico International Inc., 55, Théodore-Viau, Terrebonne, Quebec, Canada J6Y 0J8, or as otherwise provided in writing by the parties.

18 Compensation

THE CUSTOMER AGREES TO DEFEND AND INDEMNIFY AND HOLD HARMLESS HYDROLICO FROM ANY CLAIMS FOR LOSSES, COSTS, EXPENSES (INCLUDING, WITHOUT LIMITATION, REASONABLE EXTRAJUDICIAL COSTS, FEES, AND DISBURSEMENTS), DEMANDS, LIABILITY, CAUSE OF ACTION, OR DAMAGES OF ANY KIND, ARISING OUT OF OR IN ANY WAY RELATED TO:

a) ANY MISUSE, ALTERATION, MODIFICATION, INSTALLATION, OR MISAPPLICATION OF ANY PRODUCT;

b) USE OF ANY PRODUCT OTHER THAN IN ACCORDANCE WITH HYDROLICO INSTRUCTIONS AND SPECIFICATIONS;

c) ANY BREACH OF FEDERAL, STATE, OR LOCAL LAWS, RULES, OR REGULATIONS; OR

d) ANY BREACH OF ANY OF THE TERMS SET FORTH HEREIN OR OTHER BREACH OF ANY CUSTOMER AGREEMENT WITH HYDROLICO.

19 No third-party beneficiaries

Except as expressly provided herein, these Terms are for the sole benefit of the parties hereto and their respective successors and assigns and nothing hereof, express or implied, is intended or will confer upon any other person any right, benefit, or remedy of any kind under these Terms.

20 Applicable Law

These Terms, and any agreed amendments to them, will be governed in all respects by the laws of Quebec and the laws of Canada applicable there. Any legal claim relating to these Terms between Hydrolico and the Customer and/or to any Product sold to the Customer must be filed with a competent court in the judicial district of Terrebonne (Quebec, Canada), to the exclusion of any other court.

HYDRO CUSTOM™

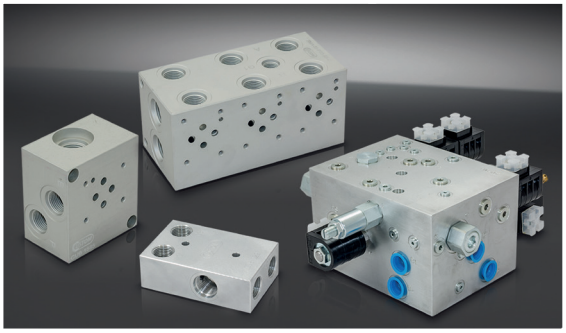

E•MC®

BAILEY HYDRAULICS™